650LS001
Dummy Stowage Receptacle - Bayonet
S J T

650LS001 M 16

S J T

- Basic Part No.
- Finish (Table II)
- Shell Size

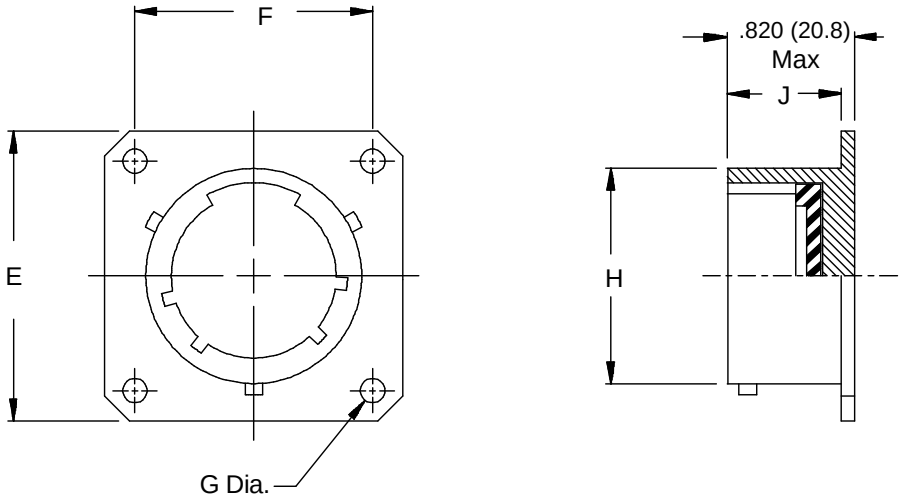

See inside back cover fold-out or page 14 for Table II.

TABLE III: DIMENSIONS

Shell Size	E	F	G	H	J Dim
08	.812 (20.6)	.594 (15.1)	.120 (3.0)	.473 (12.0)	.670 (17.0)
10	.938 (23.8)	.719 (18.3)	.120 (3.0)	.590 (15.0)	.670 (17.0)
12	1.031 (26.2)	.812 (20.6)	.120 (3.0)	.750 (19.1)	.670 (17.0)
14	1.125 (28.6)	.906 (23.0)	.120 (3.0)	.875 (22.2)	.670 (17.0)
16	1.219 (31.0)	.969 (24.6)	.120 (3.0)	1.000 (25.4)	.670 (17.0)
18	1.312 (33.3)	1.062 (27.0)	.120 (3.0)	1.125 (28.6)	.670 (17.0)
20	1.438 (36.5)	1.156 (29.4)	.120 (3.0)	1.250 (31.8)	.640 (16.3)
22	1.562 (39.7)	1.250 (31.8)	.120 (3.0)	1.375 (34.9)	.640 (16.3)
24	1.686 (42.8)	1.375 (34.9)	.147 (3.7)	1.500 (38.1)	.640 (16.3)

Metric dimensions (mm) are indicated in parentheses.

© 2005 Glenair, Inc.