T2 Terminator Tooling Specification Sheet Order No. 63911-4100

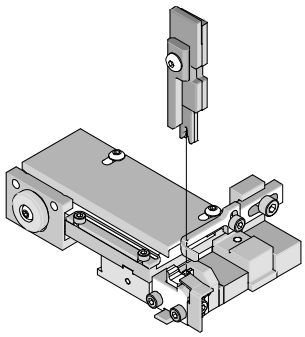

FEATURES

- It is ideally suited for mid-volume bench operations
- This terminator can be installed in the TM42 and the TM40 press or Base Unit adapter for 3BF press
- Quick punch removal with the push of a button for fast and easy tooling change
- Track adjustment capabilities in the T2 Terminators for improved control of the bell mouth size and cutoff tab length
- T2 Terminator has standardized tooling with the Molex FineAdjust Applicator which will reduce your inventory requirements

SCOPE

Products: Projector Lamp Plug and Receptacle Terminal, 18-22 AWG.

Terminal Series No.	Terminal Order No.		Wire Size		Insulation Diameter		Strip Length	
			AWG	mm²	mm	In.	mm	In.
78036	78036-2001	78036-2005	18-22	0.80-0.35	2.06-3.85	.081-.152	3.00-4.00	.118-.158
78037	78037-2001	78037-2005	18-22	0.80-0.35	2.06-3.85	.081-.152	3.00-4.00	.118-.158

DEFINITION OF TERMS

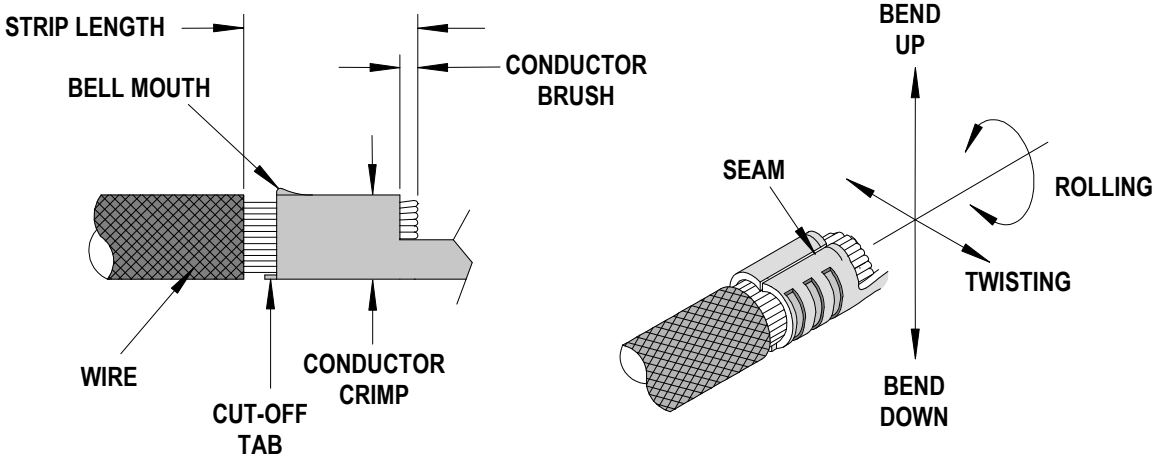

The above terminal drawing is a generic terminal representation. It is not an image of a terminal listed in the scope.

CRIMP SPECIFICATION

Terminal Series No.	Bell mouth		Cut-off Tab Maximum		Conductor Brush	
	mm	In.	mm	In.	mm	In.
78036	0.05-0.30	.002-.012	0.15	.006	0.20-1.00	.008-.039
78037	0.05-0.30	.002-.012	0.15	.006	0.20-1.00	.008-.039

Terminal Series No.	Bend up	Bend down	Twist	Roll	Punch Width mm (Ref) Conductor		Seam
	Degree (Max)		Degree (Max)		mm	In	
78036	3	3	3	5	2.00	.079	Seam shall not be open and no wire allowed out of the crimping area
78037	3	3	3	5	2.00	.079	

After crimping, the crimp profiles should measure the following:

Terminal Series No.	Wire Size	Actual mm²	Conductor Crimp				Pull Force Minimum	
			Crimp Height		Crimp Width (Ref.)			
			mm	In.	mm	In.	N	Lb.
78036	18 AWG	0.80	1.30-1.40	.051-.055	2.00	.079	107.87	24.25
	20 AWG	0.50	1.15-1.22	.045-.048	2.00	.079	58.84	13.23
	22 AWG	0.35	1.07-1.15	.042-.045	2.00	.079	39.23	8.82
78037	18 AWG	0.80	1.30-1.40	.051-.055	2.00	.079	107.87	24.25
	20 AWG	0.50	1.15-1.22	.045-.048	2.00	.079	58.84	13.23
	22 AWG	0.35	1.07-1.15	.042-.045	2.00	.079	39.23	8.82

Tool Qualification Notes:

1. The above specifications are guidelines to an optimum crimp.

PARTS LIST

T2 Terminator 63911-4100				
Item	**Order No**	**Engineering No.**	**Description**	**Quantity**
Perishable Tooling				
	63911-4170	63911-4170	Tool Kit (All "Y" Items)	REF
1	63444-2017	63444-2017	Conductor Punch	1 Y
2	63455-0084	63455-0084	Conductor Anvil	1 Y
3	63443-0035	63443-0035	Front Cut-Off Plunger	1 Y
4	63443-0036	63443-0036	Front Plunger Retainer	1 Y
Other Components				
5	11-18-4083	60707-8	Feed Guide	1
6	63443-3160	63443-3160	Front Plunger Striker	1
7	63443-0009	63443-0009	Front Scrap Chute	1
8	63443-0024	63443-0024	Key	1
9	63443-0085	63443-0085	Wire Stop L-Bracket	1
10	63443-0090	63443-0090	Wire Stop	1
11	63443-1718	63443-1718	18.80mm Height Spacer	1
12	63443-2215	63443-2215	15.00mm Coarse Spacer	2
13	63443-2314	63443-2314	3.70mm Fine Spacer	1
14	63443-6004	63443-6004	Rear Cover	1
15	63454-0101	63454-0101	Punch Spacer	1
16	63700-0539	63700-0539	Cut-Off Plunger Spring	1
Frame				
17	63800-8500	63800-8500	T2 Terminator	1
Hardware				
18	N/A	N/A	M3 by 6 Long FHCS	1**
19	N/A	N/A	M3 by 6 Long SHCS	2**
20	N/A	N/A	M4 by 6 Long SHCS	2**
21	N/A	N/A	M4 by 12 Long BHCS	2**
22	N/A	N/A	M4 by 14 Long SHCS	2**
23	N/A	N/A	M4 by 45 Long SHCS	2**
24	N/A	N/A	M5 by 12 Long SHCS	1**
25	N/A	N/A	#10-32 by 3/8"Long BHCS	1**
** Available from an industrial supply company such as MSC (1-800-645-7270).				

Assembly Drawing

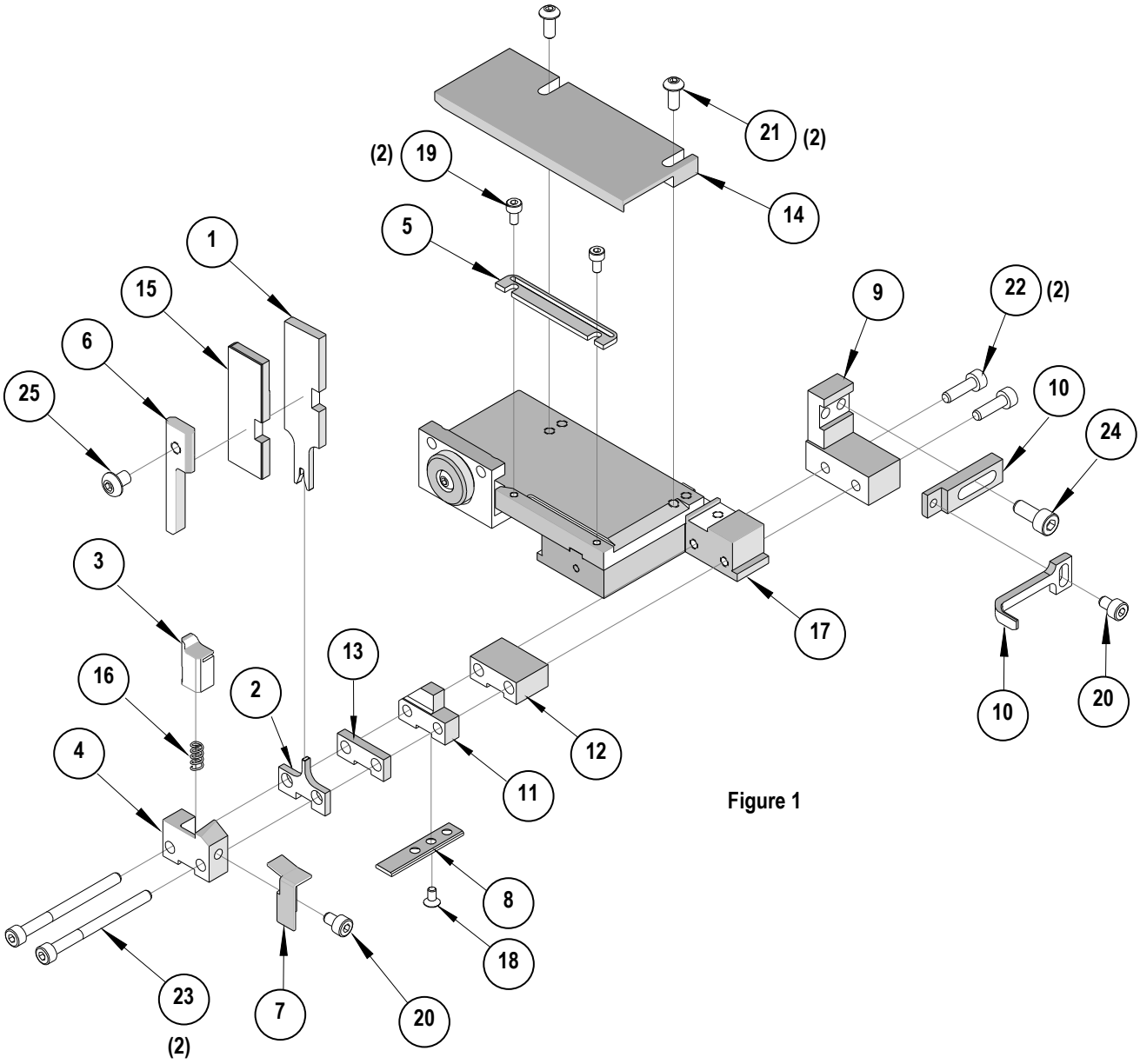

Figure 1

NOTES

1. Molex recommends an extra perishable tooling kit be maintained at your facility.
2. Verify tooling alignment by manually cycling the press before crimping under power. Check that all screws are tight.
3. Slugs, Terminals, Dirt and Oil should be kept clear of work area.
4. This Terminator should be only used in a Molex TM42, TM40, or 3BF Press with a Base Unit adaptor.
5. Wear safety glasses at all times.
6. For recommended maintenance refer to the TM40, TM42 Manual.

CAUTION: To prevent injury never operate this Terminator without the guards supplied with the press in place. Reference the TM42 press manufacturer's instruction manual.

CAUTION: Molex crimp specifications are valid only when used with Molex terminals, applicators and tooling.

Americas Headquarters
Lisle, Illinois 60532 U.S.A.
1-800-78MOLEX
amerinfo@molex.com

Far East North Headquarters
Yamato, Kanagawa, Japan
81-462-65-2324
feninfo@molex.com

Far East South Headquarters
Jurong, Singapore
65-6-268-6868
fesinfo@molex.com

European Headquarters
Munich, Germany
49-89-413092-0
eurinfo@molex.com

Corporate Headquarters
2222 Wellington Ct.
Lisle, IL 60532 U.S.A.
630-969-4550
Fax: 630-969-1352

Visit our Web site at http://www.molex.com