Mini-Mac Applicator Specification Sheet Order No. 63891-9300

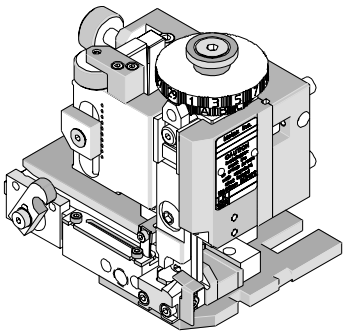

FEATURES

- Directly adapts to most automatic wire processing machines
- Applicator designed to industry standard mounting and shut height 135.80mm (5.346")
- Quick set-up time; plus the crimp height, track and feed adjustments can be set without removing the applicator from the press
- Fine adjustment allows users to achieve target with little effort by adjusting in increments of .015mm (.0006") for conductor crimp height and .063mm (.0025") for insulation height
- Independent adjustment rings allow users to quickly adjust the conductor or insulation crimp height without affecting each other.

SCOPE

Products: Sabre™ Male Flat Blade Crimp Terminal, 18 (2) AWG.

Terminal Series No.	Terminal Order No.	Wire Size		Insulation Diameter		Strip Length	
		AWG	mm²	mm	In.	mm	In.
43178	43178-3001	18 (2)	0.80 (2)	3.03-4.57	.119-.180	3.96-5.54	.156-.218
	43178-3002						
	43178-3003						

DEFINITION OF TERMS

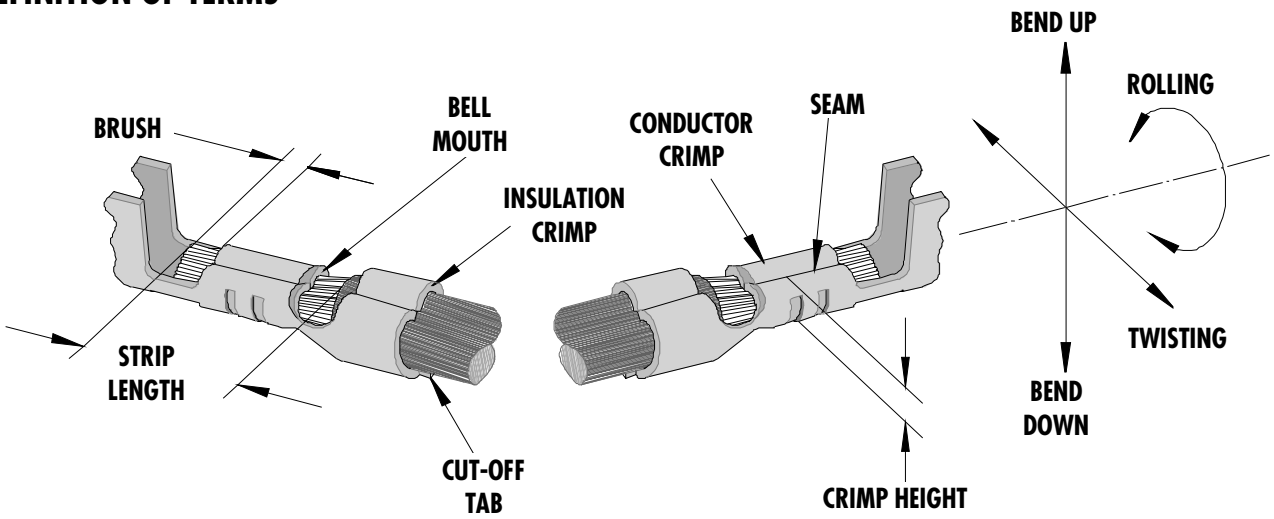

The above terminal drawing is a generic terminal representation. It is not an image of a terminal listed in the scope.

CRIMP SPECIFICATIONS

Terminal Series No.	Bell mouth		Cut-off Tab Max.		Conductor Brush	
	mm	In.	mm	In.	mm	In.
43178	0.25-1.00	.010-.039	0.50	.019	1.50	.059

Terminal Series No.	Bend up	Bend down	Twist	Roll	Punch Width (Ref)				Seam
					Conductor		Insulation		
	Degree		Degree		mm	In	mm	In	
43178	3	3	4	8	3.40	.133	6.40	.252	Seam shall not be open and no wire allowed out of the crimping area

After crimping, the conductor profile should measure the following.

Terminal Series No.	Wire Size		Crimp Height		Pull Force Minimum	
	AWG	mm^2	mm	In.	N	Lb.
43178	18 (2)	0.80 (2)	1.75-1.85	.069-.073	88.9	20.0

Pull Force should be measured with no influence from the insulation crimp.

The above specifications are guidelines to an optimum crimp.

PARTS LIST

Mini-Mac Applicator 63891-9300				
Item	**Order No**	**Engineering No.**	**Description**	**Quantity**
Perishable Tooling				
	63891-9370	63891-9370	Tool Kit (All "Y" Items)	REF
1	63830-4001	63830-4001	Conductor Punch	1 Y
2	63445-3443	63445-3443	Conductor Anvil	1 Y
3	11-18-5409	60828B134	Insulation Punch	1 Y
4	11-18-5408	60828B133	Insulation Anvil	1 Y
5	63443-0047	63443-0047	Front Cut-Off Plunger	1 Y
6	63443-0012	63443-0012	Cut-off Plunger Retainer	1 Y
Other Components				
7	11-18-5442	60843A123	Front Cover	1
8	63443-0009	63443-0009	Scrap Shield	1
9	63443-0021	63443-0021	Lower Tooling Key	1
10	63443-0090	63443-0090	Wire Stop	1
11	63443-6121	63443-6121	Rear Cover	1
12	63700-0539	63700-0539	Heavy Duty Cut-off Plunger Spring	1
13	63803-5118	63803-5118	Conductor Bushing	1
14	63830-3005	63830-3005	Tooling Washer	1
15	63830-3006	63830-3006	Front Plunger Striker	1
16	63830-4002	63830-4002	Anvil Mount	1
Frame				
17	63801-3201	63801-3201	Top	1
18	63801-3282	63801-3282	Base	1
19	63801-6550	63801-6550	Track	1
Hardware				
20	N/A	N/A	M3 by 6 Long SHCS	2**
21	N/A	N/A	M4 by 6 Long SHCS	2**
22	N/A	N/A	M4 by 8 Long BHCS	4**
23	N/A	N/A	M4 by 12 Long BHCS	2**
24	N/A	N/A	M4 by 25 Long SHCS	2**
25	N/A	N/A	M5 by 12 Long SHCS	1**
26	N/A	N/A	M8 by 20 Long BHCS	1**
27	N/A	N/A	3MM by 6 Long Roll Pin	1**
** Available from an industrial supply company such as MSC (1-800-645-7270).				

Assembly Drawing

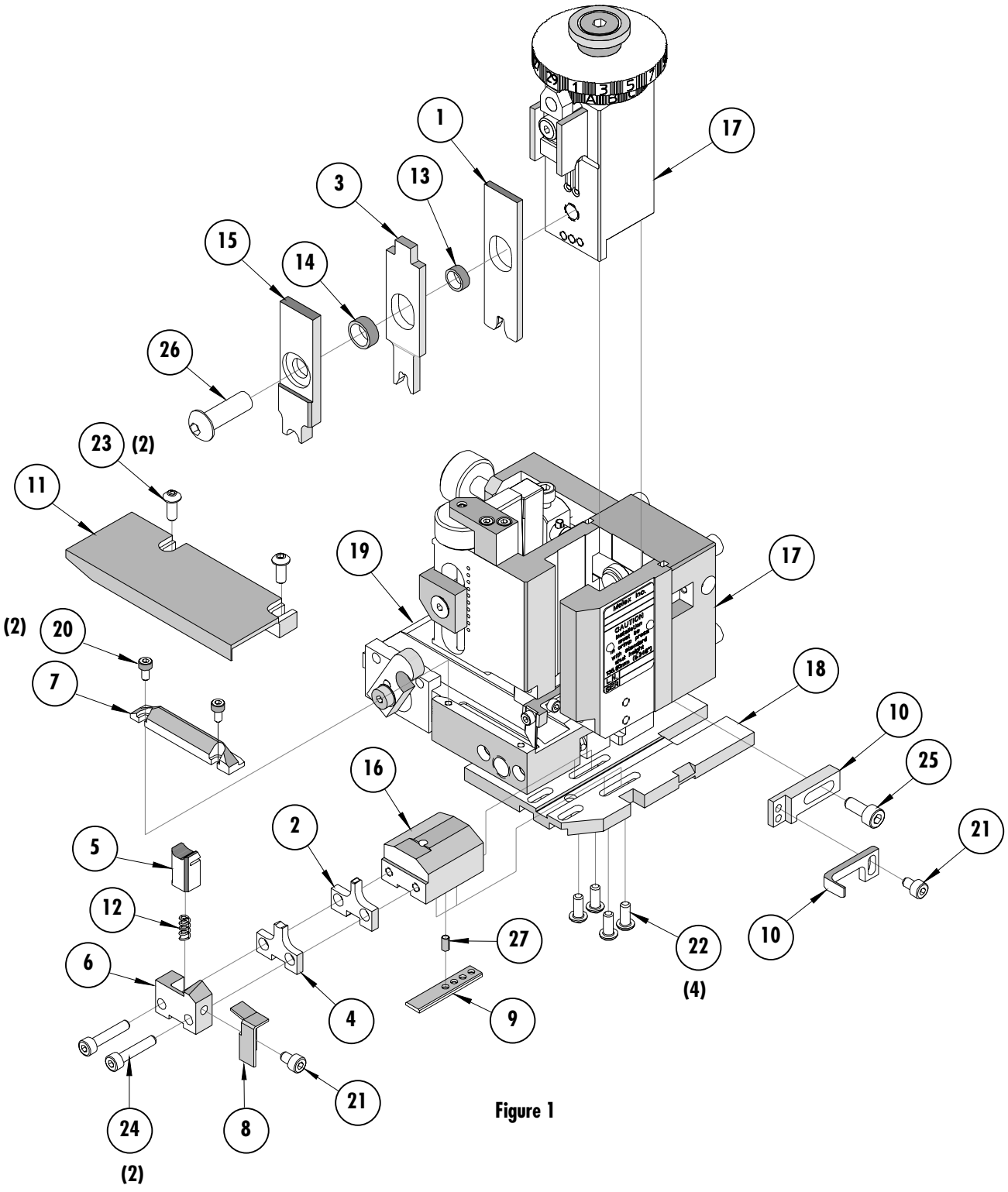

Figure 1

NOTES

1. Molex recommends an extra perishable tooling kit be maintained at your facility.
2. Verify tooling alignment by manually cycling the press and applicator before crimping under power. Check that all screws are tight.
3. Slugs, terminals, dirt, and oil should be kept clear of work area.
4. Wear safety glasses at all times.
5. For recommended maintenance refer to the Mini-Mac Manual.

CAUTION: This applicator should only be used in a press with a shut height of 135.80 mm (5.346"). Tooling damage could result at a lower setting

CAUTION: To prevent injury, never operate this applicator without the guards supplied with the press or wire-processing machine in place. Reference the press or wire processing manufacturer's instruction manual.

CAUTION: Molex crimp specifications are valid only when used with Molex terminals, applicators and tooling.

Contact Information

For more information on Molex application tooling please contact Molex at 1-800-786-6539.

Americas Headquarters
Lisle, Illinois 60532 U.S.A.
1-800-78MOLEX
amerinfo@molex.com

Far East North Headquarters
Yamato, Kanagawa, Japan
81-462-65-2324
feninfo@molex.com

Far East South Headquarters
Jurong, Singapore
65-6-268-6868
fesinfo@molex.com

European Headquarters
Munich, Germany
49-89-413092-0
eurinfo@molex.com

Corporate Headquarters
2222 Wellington Ct.
Lisle, IL 60532 U.S.A.
630-969-4550
Fax: 630-969-1352

Visit our Web site at http://www.molex.com