Mini-Mac Applicator

molex

Application Tooling Specification Sheet

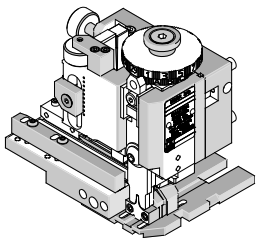

Order No. 63882-2000

FEATURES

- Directly adapts to most automatic wire processing machines
- Applicator designed to industry standard mounting and shut height 135.80mm (5.346")
- Quick set-up time; plus the crimp height, track and feed adjustments can be set without removing the applicator from the press
- Fine adjustment allows users to achieve target with little effort by adjusting in increments of .015mm (.0006") for conductor crimp height and .063mm (.0025") for insulation height
- Independent adjustment rings allow users to quickly adjust the conductor or insulation crimp height without affecting each other.

SCOPE

Products: Flat Blade Crimp Terminal 14-22 AWG

Terminal Series No.	Terminal Reeled Order No		Wire Size		Insulation Diameter Maximum		Strip Length	
			AWG	mm²	mm	In.	mm	In.
2176	05-06-0301	05-06-0303	14-22	2.00-0.35	3.55	.140	3.55-4.75	.140-.187
2328	05-06-0401	05-06-0402	14-22	2.00-0.35	3.55	.140	3.55-4.75	.140-.187
2576	05-06-0305		14-22	2.00-0.35	3.55	.140	3.55-4.75	.140-.187
7676	05-06-0311	05-06-0312	14-22	2.00-0.35	3.55	.140	3.55-4.75	.140-.187

DEFINITION OF TERMS

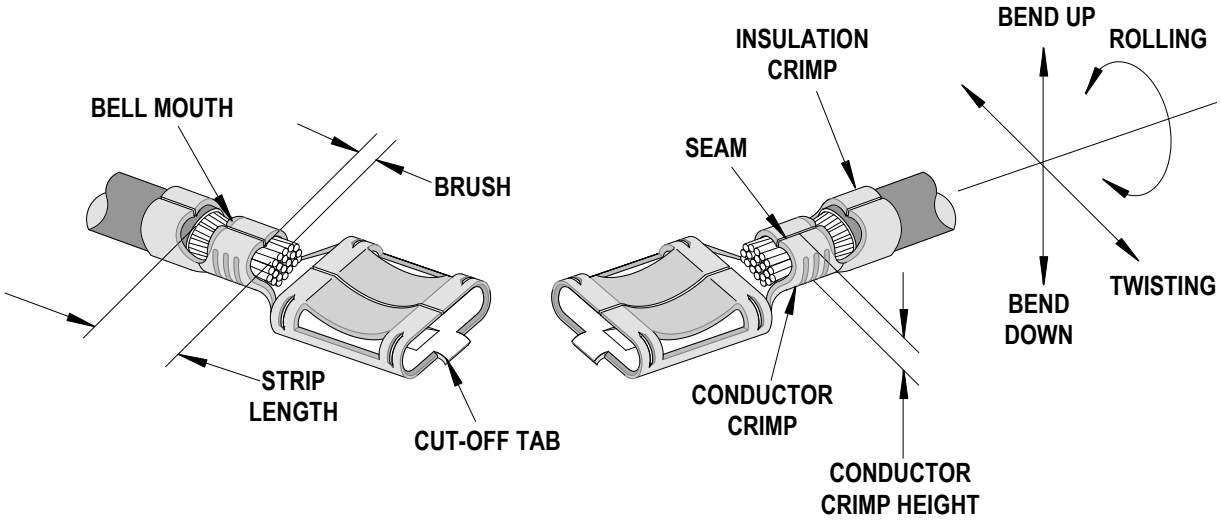

The above terminal drawing is a generic terminal representation. It is not an image of a terminal listed in the scope.

CRIMP SPECIFICATIONS

Terminal Series No.	Bell mouth		Cut-off Tab*		Conductor Brush	
	mm	In.	mm	In.	mm	In.
2176			0.26-0.46	.010-.018		
2328			0.26-0.46	.010-.018		
2576			0.26-0.46	.010-.018		
7676			0.26-0.46	.010-.018		

*Cut-off Tab Note: It is normal for this applicator to create a cut-off tab that is slightly bent down. The size of the tab can be adjusted by moving the track. See TM-638000100 for track adjustment details.

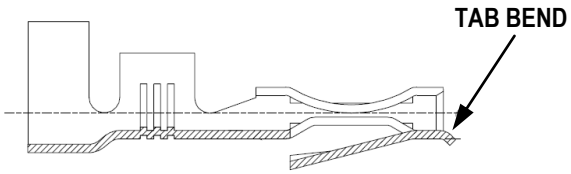

Terminal Series No.	Bend up Bend down		Twist Roll		Punch Width (Ref)				Seam
	Degree		Degree		Conductor		Insulation		
					mm	In	mm	In	
2176					2.30	.091	3.15	.124	Seam shall not be open and no wire allowed out of the crimping area
2328					2.30	.091	3.15	.124	
2576					2.30	.091	3.15	.124	
7676					2.30	.091	3.15	.124	

NOTE: Some of the specifications in these charts above are intentionally left blank due to the fact that the information does not currently exist.

After crimping, the conductor profile should measure the following.

Terminal Series No.	Wire Size		Conductor Crimp Height		Pull Force Minimum	
	AWG	mm^2	mm	In.	N	Lb.
2176	14	2.00	1.52-1.57	.060-.062	177.9	40.0
	16	1.30	1.42-1.47	.056-.058	155.7	35.0
	18	0.80	1.27-1.32	.050-.052	111.2	25.0
	20	0.50	1.22-1.27	.048-.050	66.7	15.0
	22	0.35	1.17-1.22	.046-.048	53.4	12.0
2328	14	2.00	1.52-1.57	.060-.062	177.9	40.0
	16	1.30	1.42-1.47	.056-.058	155.7	35.0
	18	0.80	1.27-1.32	.050-.052	111.2	25.0
	20	0.50	1.22-1.27	.048-.050	66.7	15.0
	22	0.35	1.17-1.22	.046-.048	53.4	12.0
2576	14	2.00	1.52-1.57	.060-.062	177.9	40.0
	16	1.30	1.42-1.47	.056-.058	155.7	35.0
	18	0.80	1.27-1.32	.050-.052	111.2	25.0
	20	0.50	1.22-1.27	.048-.050	66.7	15.0
	22	0.35	1.17-1.22	.046-.048	53.4	12.0
7676	14	2.00	1.52-1.57	.060-.062	177.9	40.0
	16	1.30	1.42-1.47	.056-.058	155.7	35.0
	18	0.80	1.27-1.32	.050-.052	111.2	25.0
	20	0.50	1.22-1.27	.048-.050	66.7	15.0
	22	0.35	1.17-1.22	.046-.048	53.4	12.0

Tool Qualification Notes:

1. Pull Force should be measured with no influence from the insulation crimp.
2. The above specifications are guidelines to an optimum crimp.

PARTS LIST

Mini-Mac Applicator 63882-2000				
Item	Order No	Engineering No.	Description	Quantity
Perishable Tooling				
	63882-2070	63882-2070	Tool Kit (All "Y" Items)	REF.
1	11-18-4190	60711A101	Conductor Punch	1 Y
2	11-18-4191	60711A102	Combination Anvil	1 Y
3	11-18-4192	60711A103	Insulation Punch	1 Y
4	11-18-4193	60711A104	Cut-off Blade	1 Y
5	11-18-4194	60711A105	Cut-Off Plunger	1 Y
6	11-18-4090	60709A107	Plunger Retainer	1 Y
Other Components				
7	11-18-4091	60709A108	Rear Plunger Striker	1
8	11-18-4195	60711A106	Spacer	1
9	11-18-4199	60711A110	Tooling Washer	1
10	11-24-1067	4996-4	Cut-Off Plunger Spring	1
11	63443-0090	63443-0090	Wire Stop	1
12	63801-4510	63801-4510	Front Cover	1
13	63801-4558	63801-4558	Rear Cover	1
14	63803-5105	63803-5105	Conductor Bushing	1
Frame				
15	63801-3201	63801-3201	Top	1
16	63801-3282	63801-3282	Base	1
17	63801-6650	63801-6650	Track	1
Hardware				
18	N/A	N/A	#6-32 by 1/2" Long SHCS	2**
19	N/A	N/A	#8-32 by 3/8" Long BHCS	3**
20	N/A	N/A	M3 by 6 Long SHCS	2**
21	N/A	N/A	M4 by 6 Long SHCS	1**
22	N/A	N/A	M4 by 16 Long BHCS	2**
23	N/A	N/A	M4 by 18 Long SHCS	2**
24	N/A	N/A	M5 by 8 Long SHCS	1**
25	N/A	N/A	M8 by 20 Long BHCS	1**
** Available from an industrial supply company such as MSC (1-800-645-7270).				

Assembly Drawing

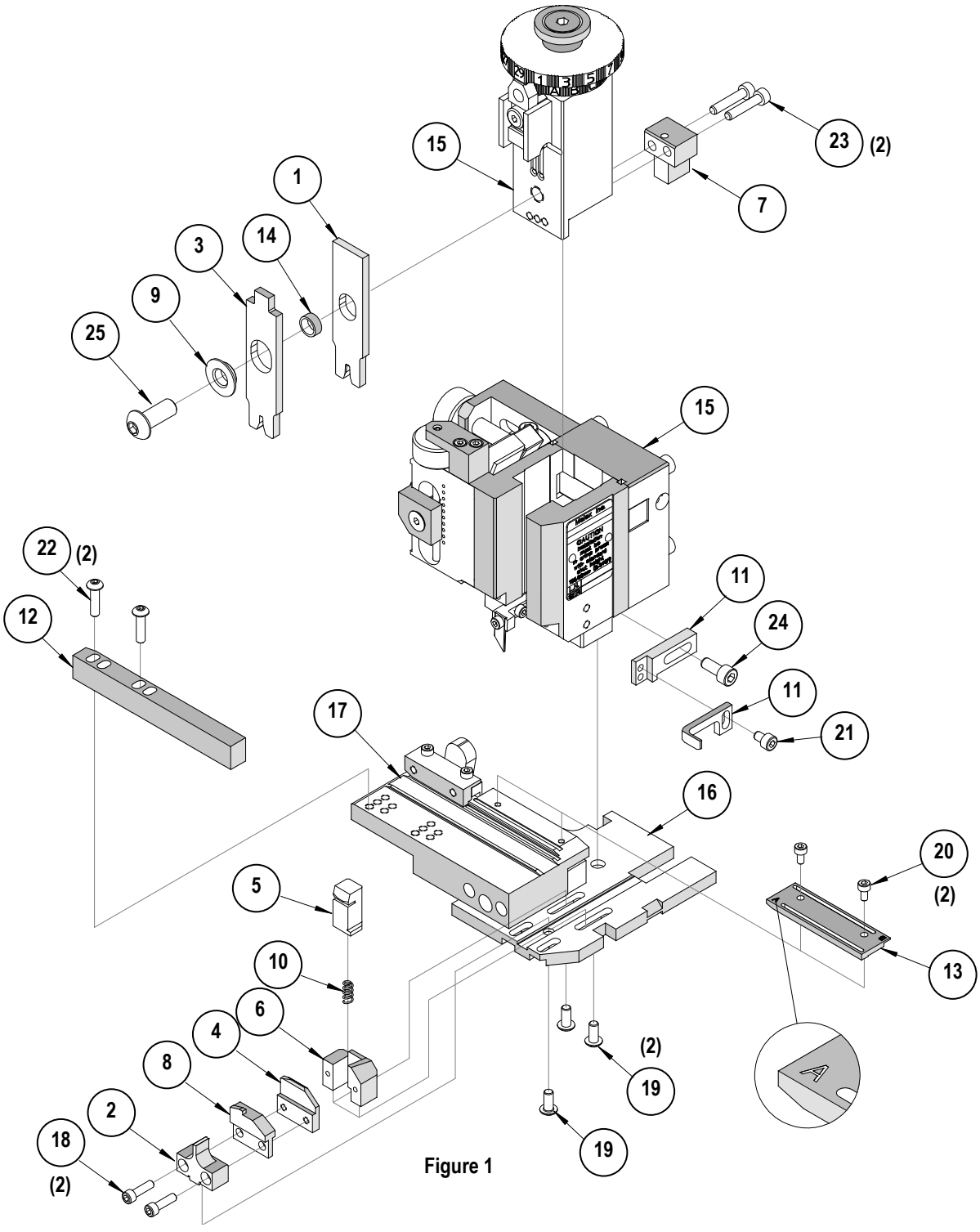

Figure 1

NOTES

1. Molex recommends an extra perishable tooling kit be maintained at your facility.
2. Verify tooling alignment by manually cycling the press and Applicator before crimping under power. Check that all screws are tight.
3. Slugs, Terminals, Dirt and Oil should be kept clear of work area.
4. Wear safety glasses at all times.
5. For recommended maintenance refer to the Mini-Mac Manual.

CAUTION: This applicator should only be used in a press with a shut height of 135.8 mm (5.346"). Tooling damage could result at a lower setting.

CAUTION: To prevent injury never operate this Applicator without the guards supplied with the press or wire-processing machine in place. Reference the press or wire processing manufacturer's instruction manual.

CAUTION: Molex crimp specifications are valid only when used with Molex terminals, applicators and tooling.

Contact Information

For more information on Molex application tooling please contact Molex at 1-800-786-6539.

Visit our Web site at http://www.molex.com