This document was generated on 12/08/2014

PLEASE CHECK WWW.MOLEX.COM FOR LATEST PART INFORMATION

Part Number: 63819-5500
Status: Active
Description: Hand Crimp Tool for 14-18 AWG Male and Female Power Contact Terminals

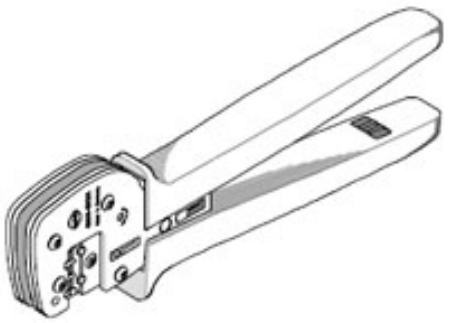

Series image - Reference only

Documents:
RoHS Certificate of Compliance (PDF)

General

Product Family	Application Tooling
Series	T9999
Comments	See Tooling Specification (PDF) Above. Type: 4C
Function	Crimp
Geographic Area	Global
Level of Automation	Manual
More Detailed Tech Information	applicationtooling@molex.com
Product Name	PremiumGrade™
Survey	www.molex.com//review/apptool_survey.html
Tool Type	Handtool
UPC	883906429782

Material Info

Reference - Drawing Numbers

Application Tooling Documents	ATS-6381955HM, TM-638000029, TM-638000029CN, TM-638000029DE, TM-638000029FR, TM-638000029IT, TM-638000029JP, TM-638000029KR, TM-638000029MY, TM-638000029PL, TM-638000029RU, TM-638000029SK, TM-638000029SP, TM-638000029TH, TM-638000029TW, TM-638000029VN

EU RoHS
ELV and RoHS Compliant
REACH SVHC
Not Reviewed
Low-Halogen Status
Not Reviewed

China RoHS

Need more information on product environmental compliance?

Email productcompliance@molex.com
For a multiple part number RoHS Certificate of Compliance, click here

Please visit the Contact Us section for any non-product compliance questions.

Search Parts in this Series
T9999Series

Use With
44262 Crimp Terminal

This document was generated on 12/08/2014

PLEASE CHECK WWW.MOLEX.COM FOR LATEST PART INFORMATION