

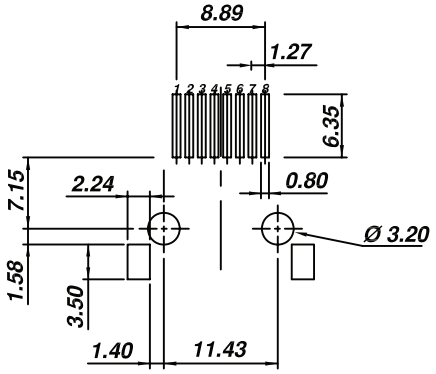

PCB LAYOUT - COMPONENT VIEW

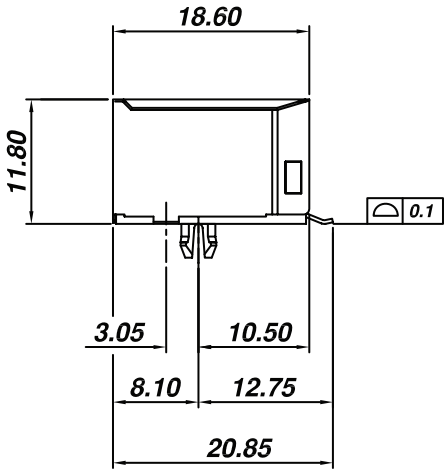

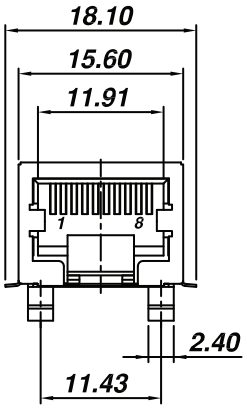

TECHNICAL CHARACTERISTICS

MATERIAL
INSULATOR: - HOUSING: PA 9T
- INSERT HOUSING: PA 46
FLAMABILITY RATING: UL94-V0
COLOR: BLACK
CONTACT MATERIAL: COPPER ALLOY
CONTACT TYPE: STAMPED
CONTACT PLATING: SELECTIVE GOLD
SHIELDING: BRASS NI PLATED
QUALITY CLASS: 500 MATING CYLCES

ENVIRONMENTAL
OPERATING TEMPERATURE: -40°C UP TO +85°C
COMPLIANCE: LEAD FREE AND ROHS

ELECTRICAL
CURRENT RATING: 1.5A
WORKING VOLTAGE: 120V AC
INSULATION RESISTANCE: >500MΩ
WITHSTANDING VOLTAGE: 1000 VAC/min
CONTACT RESISTANCE: 20mΩ max

STANDARD
CERITIFIED: E324776

SOLDERING
JEDEC LEAD FREE REFLOW SOLDERING PROCESS

PACKAGING
TRAY

RoHS Compliant

REV	DATE	FILE	BY
G			
F			
E			
D			
C			
B			
A	23-JUL-14	PDF	AS

PROJECTION:

APPROVAL: RJ

GENERAL TOLERANCE
.X = +/- 0.3
.XX = +/- 0.25

UNIT: MM
SCALE:
SHEET: 1/3
DRAW: AS

WÜRTH ELEKTRONIK

DESCRIPTION: HORIZONTAL SHIELDED LOW PROFILE SMT 10P8C TAB DOWN

WERI PART NO: 634 008 150 021

SIZE
A4

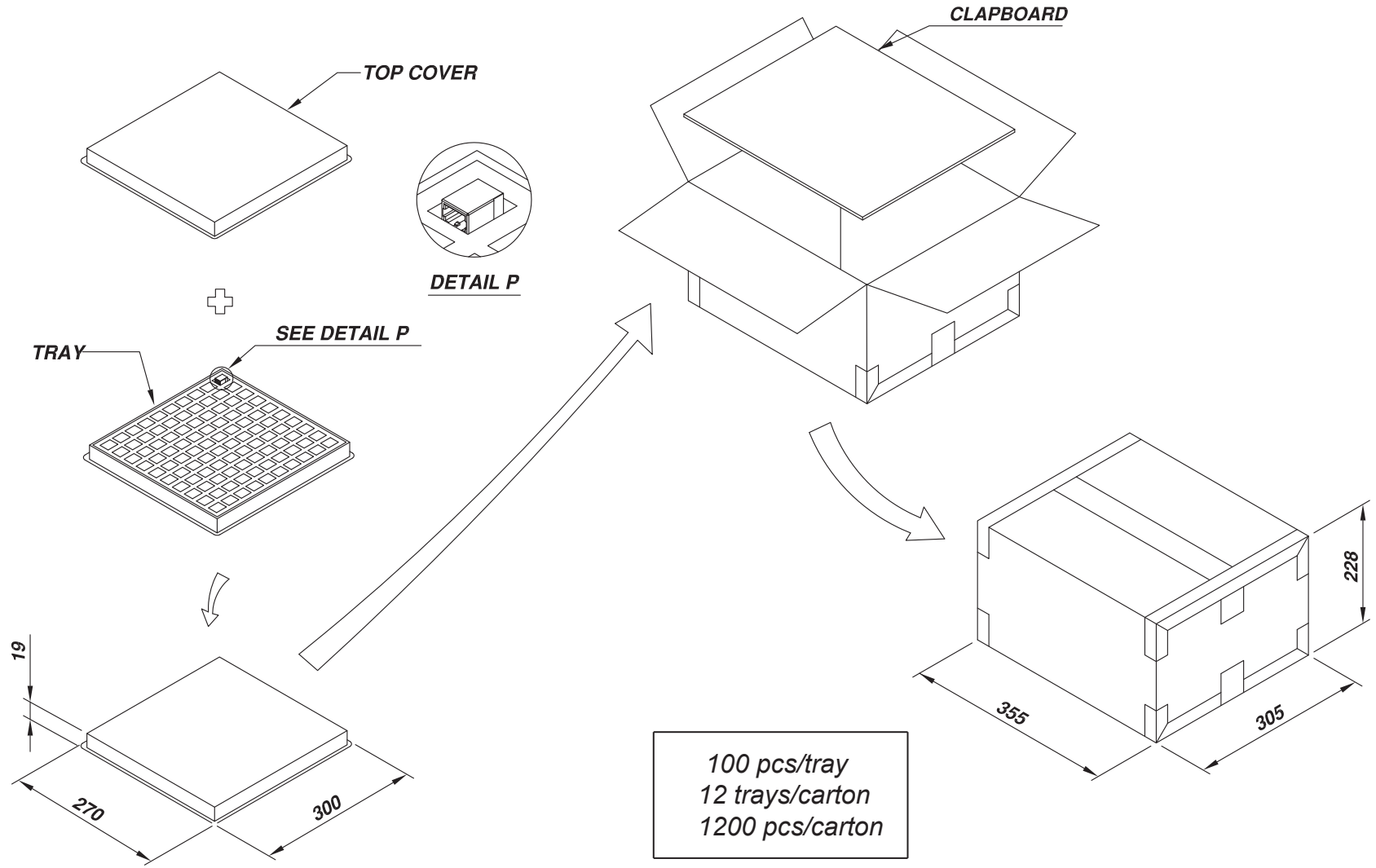

RoHS Compliant

REV	DATE	FILE	BY
G			
F			
E			
D			
C			
B			
A	28-AUG-14	PDF	AS

PROJECTION:

GENERAL TOLERANCE
.X = +/- 0.2
.XX = +/- 0.15

APPROVAL: RJ

UNIT: MM
SCALE:
SHEET: 2/3
DRAW: AS

WÜRTH ELEKTRONIK

DESCRIPTION: HORIZONTAL SHIELDED LOW PROFILE SMT 10P8C TAB DOWN

WERI PART NO: 634 008 150 021

SIZE **A4**

Cautions and Warnings:

This electronic component is designed and developed with the intention for use
in general electronics equipments.
Before incorporating the components into any equipments in the field such as aerospace, aviation,
nuclear control, submarine, transportation, (automotive control, train control, ship control),
transportation signal, disaster prevention, medical, public information network etc. where higher safety
and reliability are especially required or if there is possibility of direct damage or injury to human body,
Wurth Elektronik must be asked for a written approval.
In addition, even electronic component in general electronic equipments, when used in electrical circuits
that require high safety, reliability functions or performance, the sufficient reliability evaluation-check
for the safety must be performed before by the user before usage.

RoHS Compliant							
G				PROJECTION:	GENERAL TOLERANCE	WÜRTH ELEKTRONIK	
F					.X = +/- 0.2		
E					.XX = +/- 0.15		
D							
C				APPROVAL: JC	UNIT: MM	DESCRIPTION: DISCLAIMER	SIZE
B					SCALE:		A4
A	10-SEP-14	PDF	QL		SHEET: 3/3	WERI PART NO: DISCLAIMER	
REV	DATE	FILE	BY		DRAW: QL		