PRODUCT NO.	REMARKS
62453-022LF	WITH METAL PLATE(M2 SCREWS)

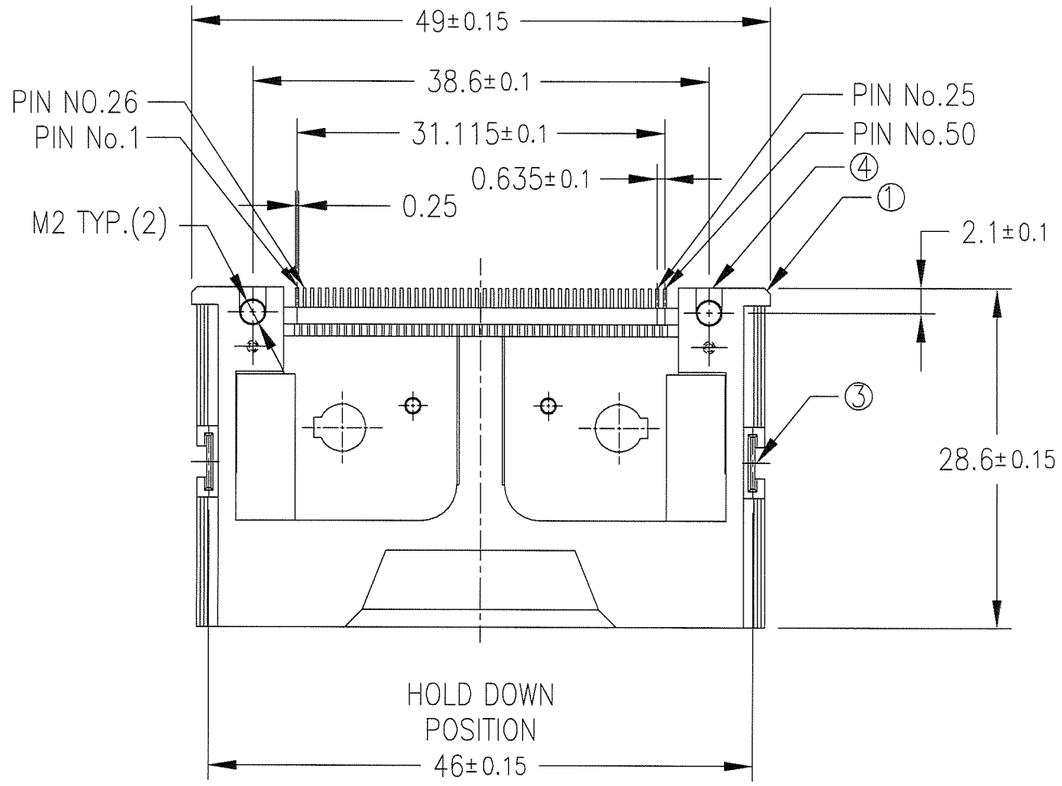

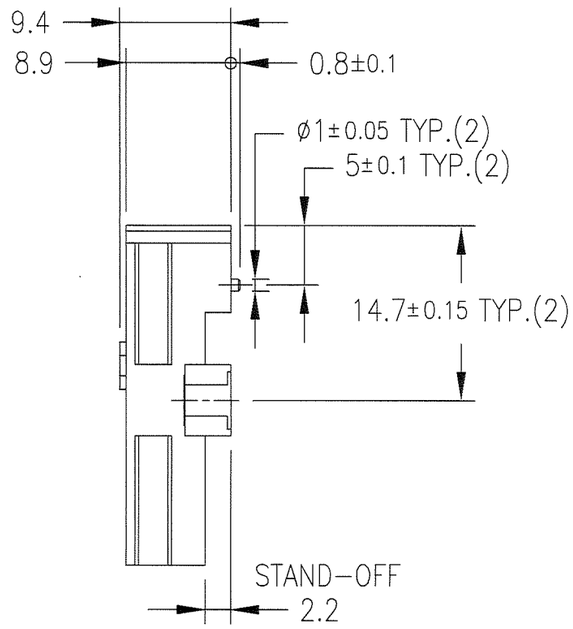

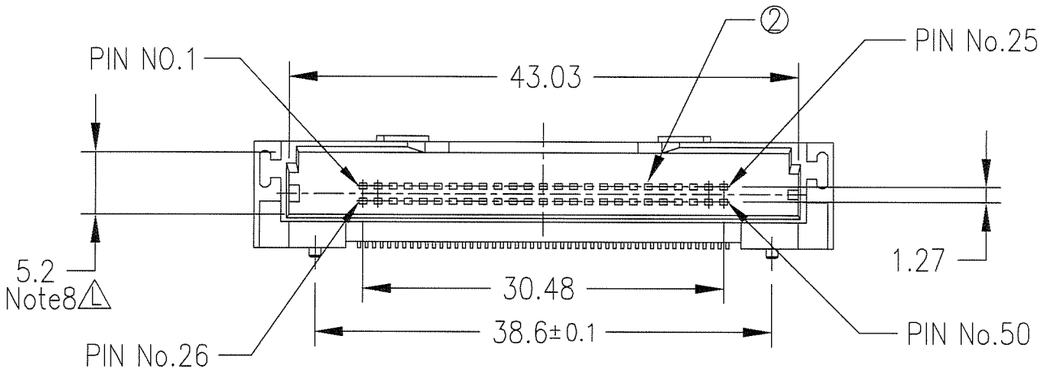

	COMPONENT	MATERIAL	FINISH	QTY.
①	HOUSING	FLAME RETARDANT RESIN	NONE (BLACK)	1
②	PIN	PHOSPHOR BRONZE	UNDER : 1.0μm MIN. Ni CONTACT AREA : 0.2μm MIN. Au SOLDER TAIL : 0.05μm MIN. Au	50
③	HOLD DOWN	PHOSPHOR BRONZE	UNDER : 1.27μm MIN. Ni SOLDER TAIL : 2.0μm MIN. Sn	2
④	METAL PLATE	BRASS	2μm MIN. Ni	2

mat'l. code ---

surface ISO 1302 ✓ | tolerance ISO 406 ISO 1101 | projection | product family: 5AZF - CF HEADER | CODE: JP

tolerances unless otherwise specified

ltr	description	ecn no	dr	date
F	ADDED SHEET 5,6	J04-0061	HS	2/18/'04
G	ADDED SHEET 7,8	J05-0357	M.H	6/16/'05
H	REVISED	J05-0748	R.S	10/31/'05
J	REVISED	J06-0315	R.S	8/1/'06
K	REVISED	J06-0399	R.S	10/20/'06
L	REVISED	J08-0316	S.W	7/28/'08

angles		0.X	±0.3
linear		0.XX	±0.3
		0.XXX	±0.3
0°±2°			

dr	S.WATANABE	7/28/'08
engr	S.WATANABE	7/28/'08
chr	H.Watanabe	2008-7-29
appd	S.Watanabe	2008-7-29

mm | scale 2:1

title: COMPACT FLASH HDR TOP MOUNT

dwg no: 62453 | sheet 1 of 8 | size: A3

type: Product Customer Drawing

sheet index										Rev.
revision	L	J	E	E	E	E	E	E		L
sheet	1	2	3	4	5	6	7	8		

FCIconnect.com
Copyright FCI.

form: A3

PDM: Rev:L STATUS:Released Printed: Aug 12, 2008

PRODUCT NO.	REMARKS
62453-022LF	WITH METAL PLATE(M2 SCREWS)

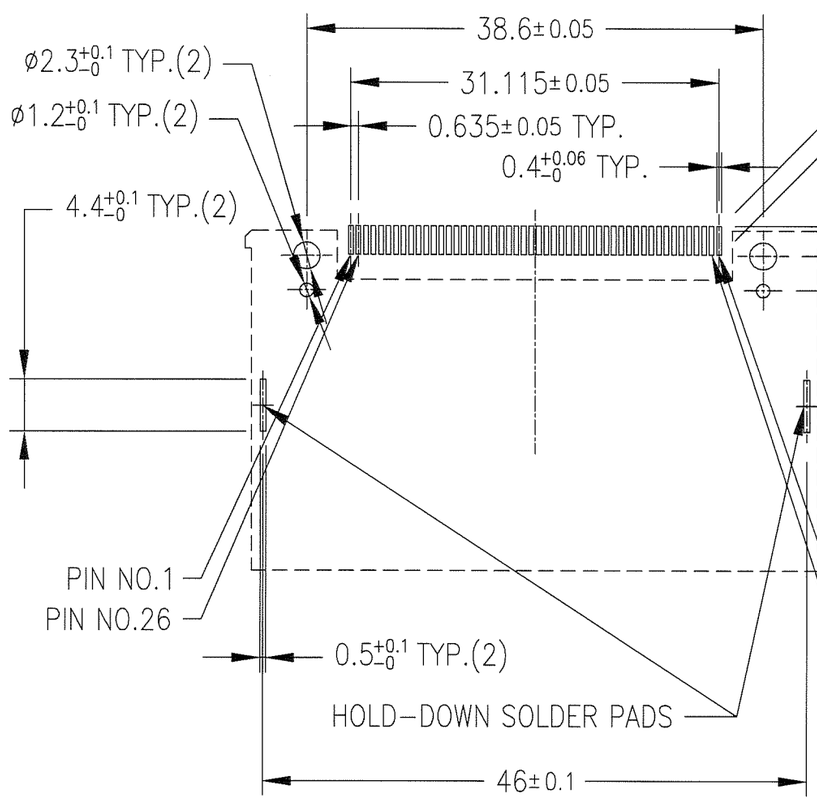

RECOMMENDED P.C.B. LAYOUT

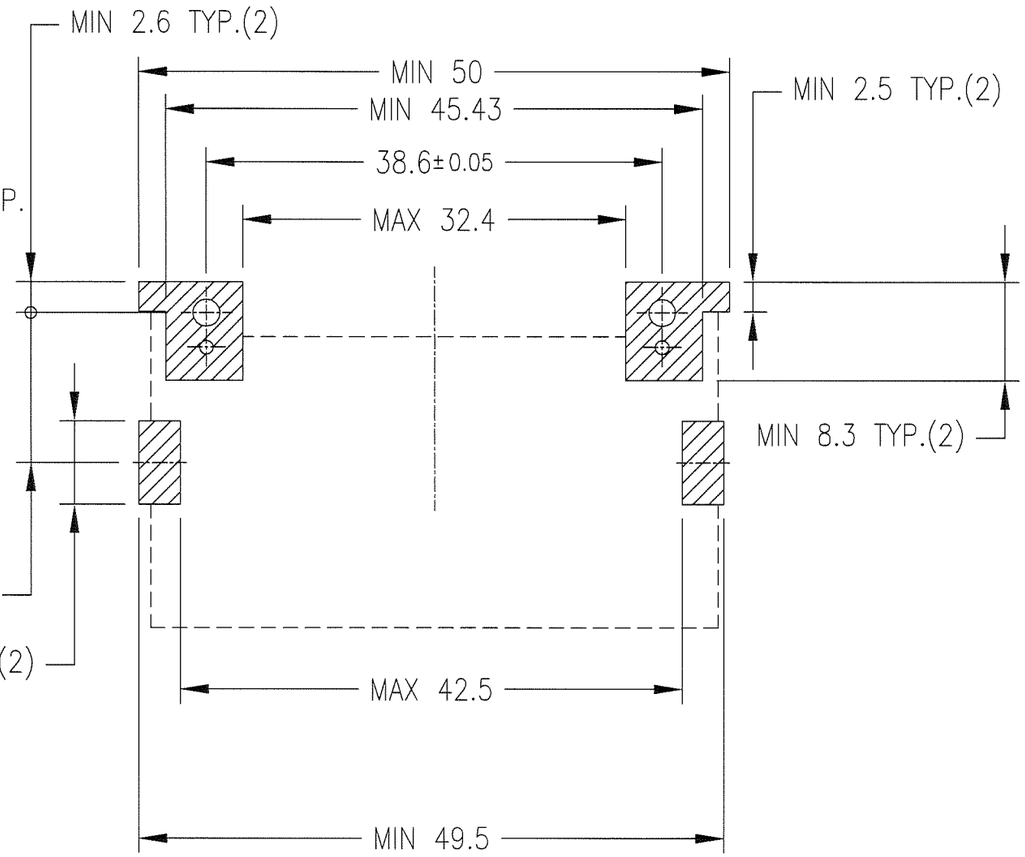

COMPONENT REFLOW KEEP OUT ZONE

NOTE
1. PRODUCT SPECIFICATION : 110-404
2. PACKAGING SPECIFICATION : GES-14-620
3. RECOMMENDED TIGHTENING TORQUE : 0.127N.m [1.3kgf.cm]
4. SOLDER TAIL CO-PLANARITY : MAX 0.1
5. RECOMMENDED HOLD-DOWN SCREW
   M 2mm X 6mm SCREWS
   FOR 0.062in/1.57mm THICK PCB
6. FOR LEAD FREE P/N, THE PRODUCT MEETS EUROPEAN UNION DIRECTIVES AND OTHER COUNTRY REGULATIONS AS DESCRIBED IN GS-22-008.
⚠7. THE HOUSING WILL WITHSTAND EXPOSURE TO 260°C PEAK TEMPERATURE FOR 10 SECONDS IN A CONVENTION, INTRA-RED OR VAPOR PHASE REFLOW OVEN.
⚠8. MEASURED AT THE BOTTOM.

ltr	description	ecn no	dr	date
D	REVISED	V20696	HS	5/15/'02
E	ADDED SHEET 3,4	V20659	HS	12/25/'02
F	REVISED	J05-0748	R.S	10/31/'05
G	REVISED	J06-0315	R.S	8/1/'06
H	REVISED	J06-0399	R.S	10/20/'06
J	REVISED	J08-0316	S.W	7/28/'08

mat'l. code	---	surface ISO 1302	tolerance ISO 406 ISO 1101
tolerances unless otherwise specified	angles 0°±2°	linear 0.X ±0.3 / 0.XX ±0.3 / 0.XXX ±0.3	projection; mm; scale 2:1
dr	S.WATANABE	7/28/'08	
engr	S.WATANABE	7/28/'08	
chr		2008-7-29	
appd	S.Watanabe	2008-7-29	

product family	5AZF - CF HEADER
CODE	JP
title	COMPACT FLASH HDR TOP MOUNT
dwg no	62453
sheet	2 of 8
size	A3
type	Product Customer Drawing
Rev.	J

sheet index | revision | sheet

FCIconnect.com
Copyright FCI.

form: A3

PDM: Rev:L STATUS:Released Printed: Aug 12, 2008

PRODUCT NO.	REMARKS
62453-122LF	WITHOUT METAL PLATE(M2 SCREWS)

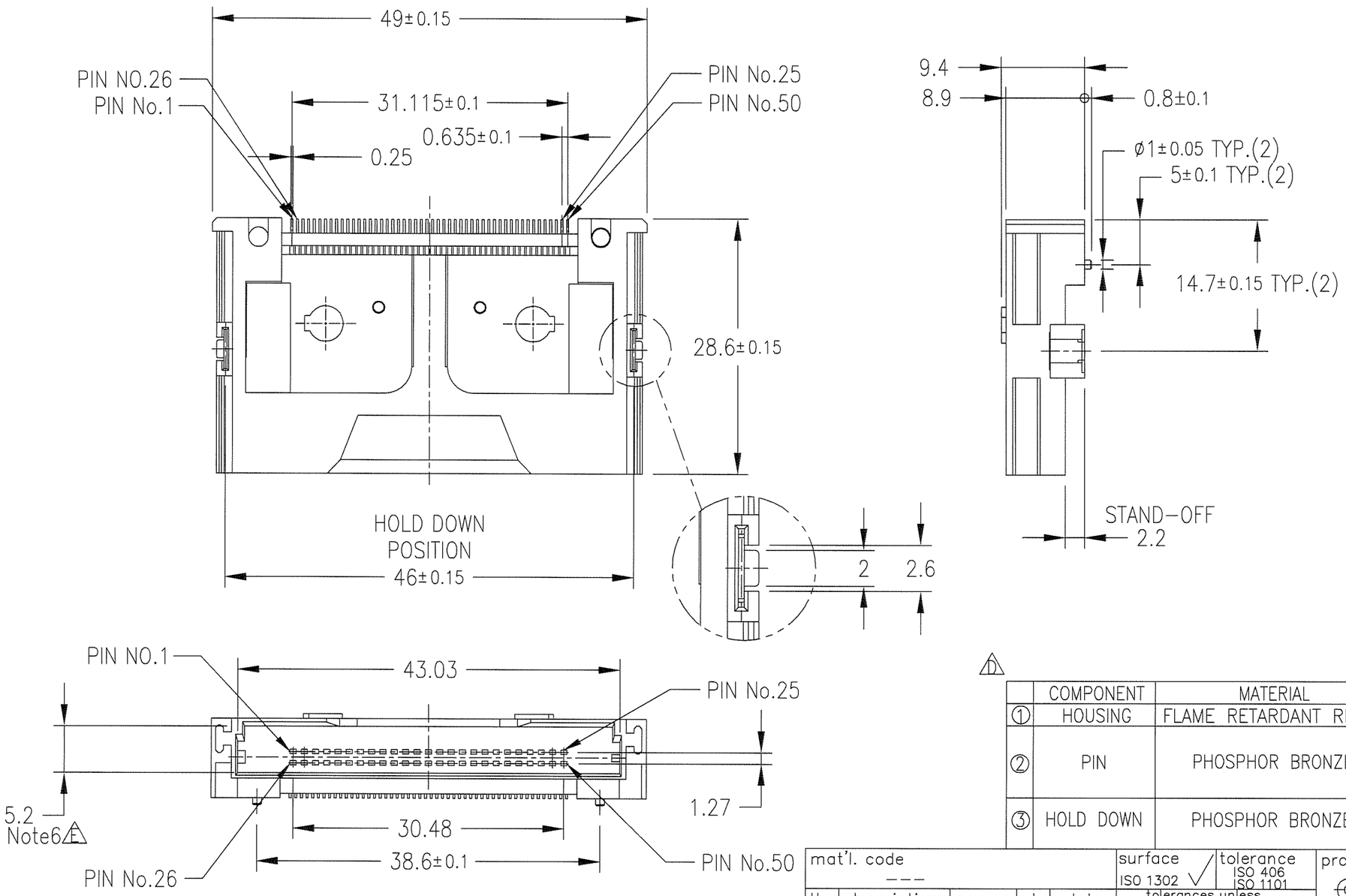

	COMPONENT	MATERIAL	FINISH	QTY.
①	HOUSING	FLAME RETARDANT RESIN	NONE (BLACK)	1
②	PIN	PHOSPHOR BRONZE	UNDER : 1.0μm MIN. Ni CONTACT AREA : 0.2μm MIN. Au SOLDER TAIL : 0.05μm MIN. Au	50
③	HOLD DOWN	PHOSPHOR BRONZE	UNDER : 1.27μm MIN. Ni SOLDER TAIL : 2.0μm MIN. Sn	2

mat'l. code ---

surface ISO 1302 ✓ | tolerance ISO 406 ISO 1101 | projection | product family 5AZF – CF HEADER | CODE JP

tolerances unless otherwise specified

ltr	description	ecn no	dr	date
A	RELEASED	J20659	HS	2/18/'04
B	REVISED	J05-0748	R.S	10/31/'05
C	REVISED	J06-0315	R.S	8/1/'06
D	REVISED	J06-0399	R.S	10/20/'06
E	REVISED	J08-0316	S.W	7/28/'08

angles	linear		
0°±2°		0.X	±0.3
		0.XX	±0.3
		0.XXX	±0.3

mm

scale 2:1

title: COMPACT FLASH HDR TOP MOUNT

dr	S.WATANABE	7/28/'08
engr	S.WATANABE	7/28/'08
chr	[signature]	2008-7-29
appd	S. Bladamin	2008-7-29

dwg no 62453 | sheet 3 of 8 | size A3

type Product Customer Drawing

sheet index | revision | sheet | Rev. E

FCIconnect.com

Copyright FCI.

form: A3

PDM: Rev:L STATUS:Released Printed: Aug 12, 2008

PRODUCT NO.	REMARKS
62453-122LF	WITHOUT METAL PLATE(M2 SCREWS) △1

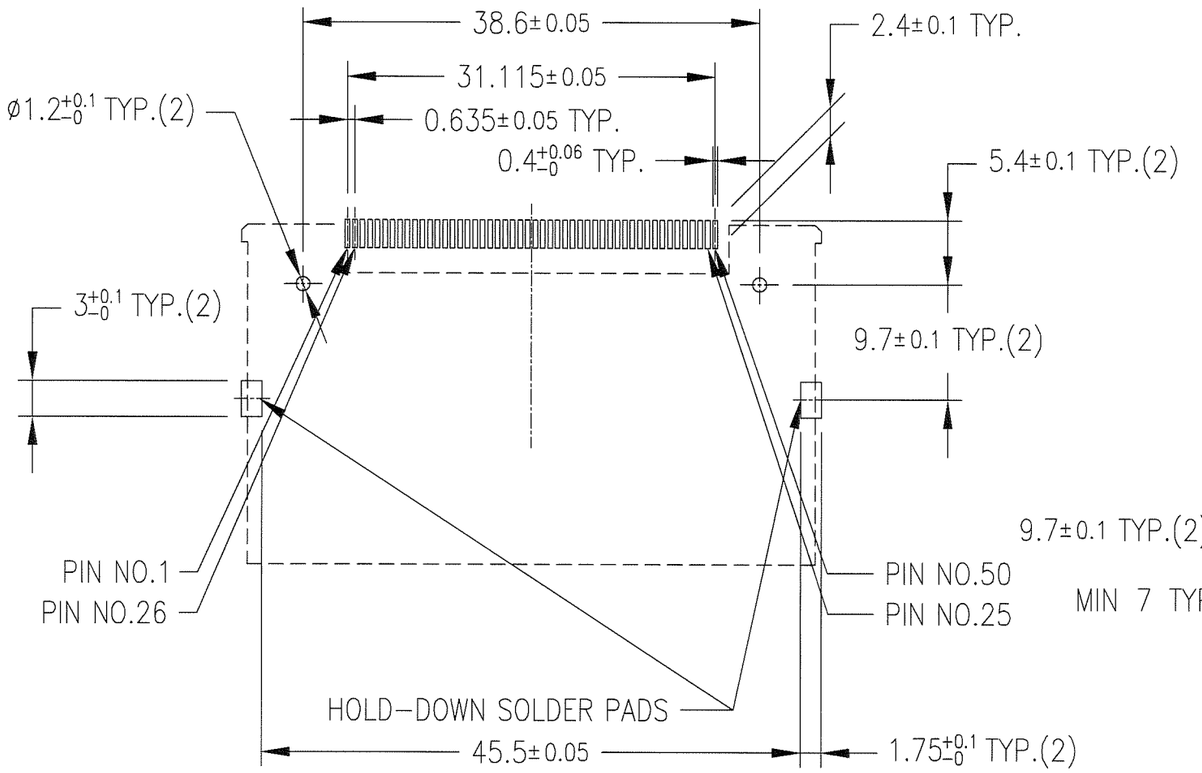

RECOMMENDED P.C.B. LAYOUT

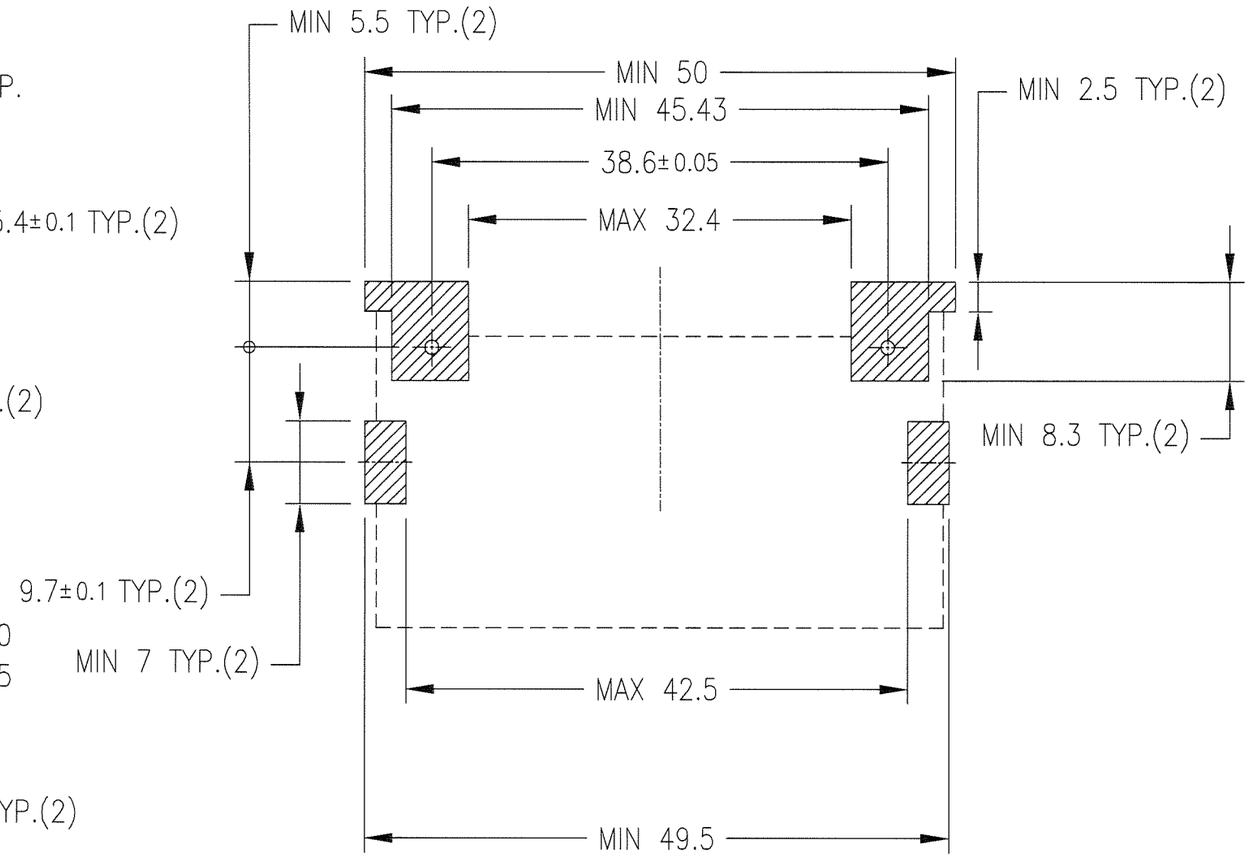

COMPONENT REFLOW KEEP OUT ZONE

NOTE
1. PRODUCT SPECIFICATION : 110-404
2. PACKAGING SPECIFICATION : GES-14-620
3. SOLDER TAIL CO-PLANARITY : MAX 0.1
4. FOR LEAD FREE P/N, THE PRODUCT MEETS EUROPEAN UNION DIRECTIVES AND OTHER COUNTRY REGULATIONS AS DESCRIBED IN GS-22-008.
△1 5. THE HOUSING WILL WITHSTAND EXPOSURE TO 260°C PEAK TEMPERATURE FOR 10 SECONDS IN A CONVENTION, INTRA-RED OR VAPOR PHASE REFLOW OVEN.
△2 6. MEASURED AT THE BOTTOM.

ltr	description	ecn no	dr	date
1	RELEASED		HS	9/12/'02
A	RELEASED	J20659	HS	12/25/'02
B	REVISED	J05-0748	R.S	10/31/'05
C	REVISED	J06-0315	R.S	8/1/'06
D	REVISED	J06-0399	R.S	10/20/'06
E	REVISED	J08-0316	S.W	7/28/'08

dr	S.WATANABE	7/28/'08
engr	S.WATANABE	7/28/'08
chr		2008-7-29
appd		2008-7-29

mat'l. code ---
surface ISO 1302
tolerance ISO 406 ISO 1101
tolerances unless otherwise specified
angles 0°±2°
linear 0.X ±0.3, 0.XX ±0.3, 0.XXX ±0.3
projection
mm
scale 2:1
product family: 5AZF – CF HEADER
CODE: JP
title: COMPACT FLASH HDR TOP MOUNT
dwg no: 62453
sheet 4 of 8
size: A3
type: Product Customer Drawing
Rev. E
sheet index / revision sheet

Copyright FCI.
FCIconnect.com

form: A3

PDM: Rev:L STATUS:Released Printed: Aug 12, 2008

PRODUCT NO.	REMARKS
62453-222LF	WITH METAL PLATE(M2 SCREWS)

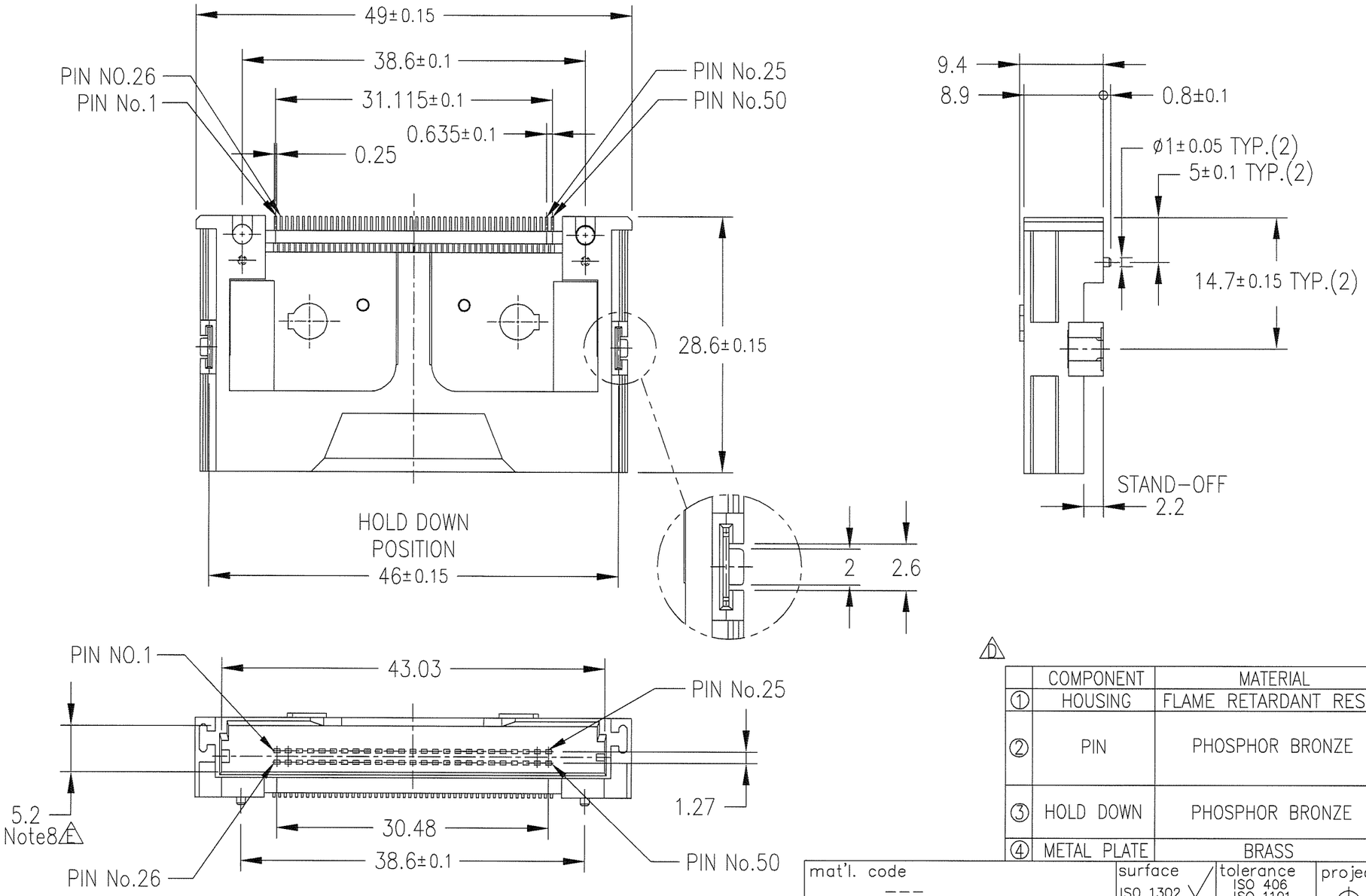

	COMPONENT	MATERIAL	FINISH	QTY.
①	HOUSING	FLAME RETARDANT RESIN	NONE (BLACK)	1
②	PIN	PHOSPHOR BRONZE	UNDER : 1.0μm MIN. Ni CONTACT AREA : 0.2μm MIN. Au SOLDER TAIL : 0.05μm MIN. Au	50
③	HOLD DOWN	PHOSPHOR BRONZE	UNDER : 1.27μm MIN. Ni SOLDER TAIL : 2.0μm MIN. Sn	2
④	METAL PLATE	BRASS	2μm MIN. Ni	2

mat'l. code ---

surface ISO 1302 ✓ | tolerance ISO 406 ISO 1101 | projection | product family 5AZF – CF HEADER | CODE JP

tolerances unless otherwise specified

ltr	description	ecn no	dr	date	angles	linear		
A	RELEASED	J04-0061	YO	2/18/'04			0.X	±0.3
B	REVISED	J05-0748	R.S	10/31/'05			0.XX	±0.3
C	REVISED	J06-0315	R.S	8/1/'06	0°±2°		0.XXX	±0.3
D	REVISED	J06-0399	R.S	10/20/'06	dr	S.WATANABE	7/28/'08	
E	REVISED	J08-0316	S.W	7/28/'08	engr	S.WATANABE	7/28/'08	
					chr	[signature]	2008-7-29	
					appd	[signature]	2008-7-29	

mm

scale 2:1

title: COMPACT FLASH HDR TOP MOUNT

dwg no 62453 | sheet 5 of 8 | size A3

type: Product Customer Drawing

sheet index | revision | sheet | Rev. E

FCIconnect.com

Copyright FCI.

form: A3

PDM: Rev:L STATUS:Released Printed: Aug 12, 2008

PRODUCT NO.	REMARKS
62453-222LF	WITH METAL PLATE(M2 SCREWS)

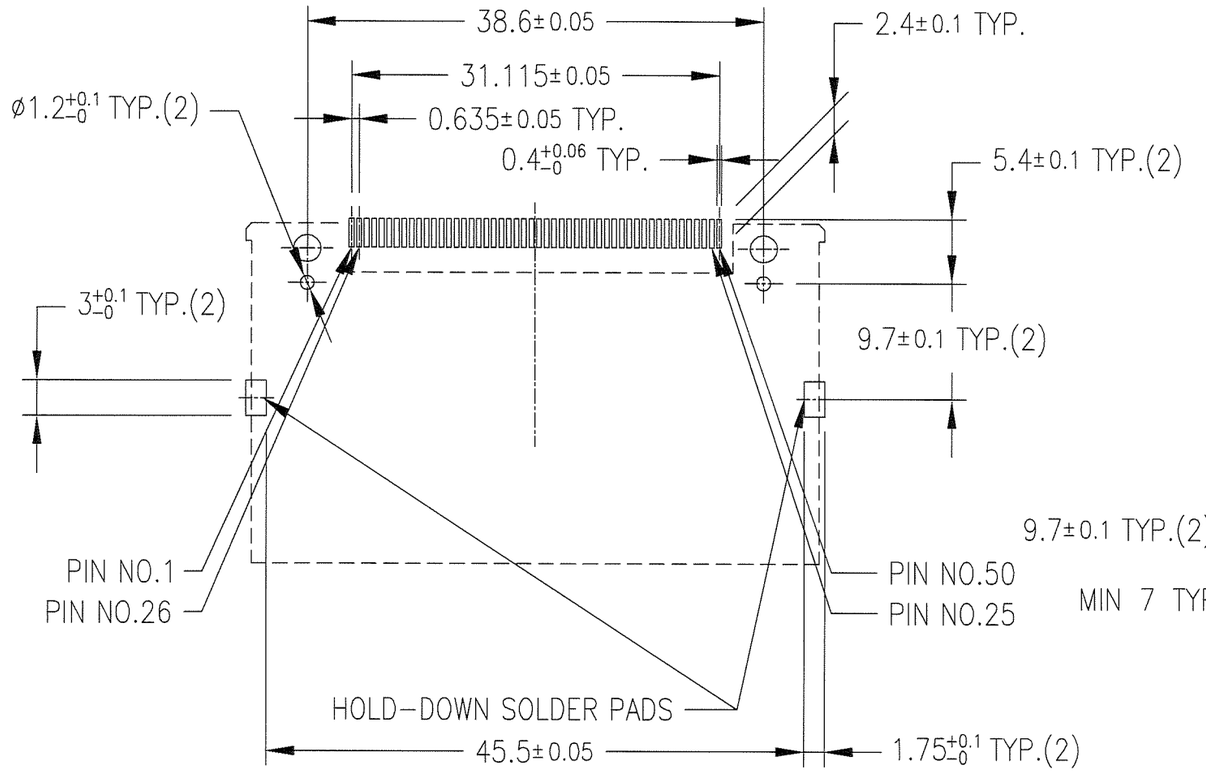

RECOMMENDED P.C.B. LAYOUT

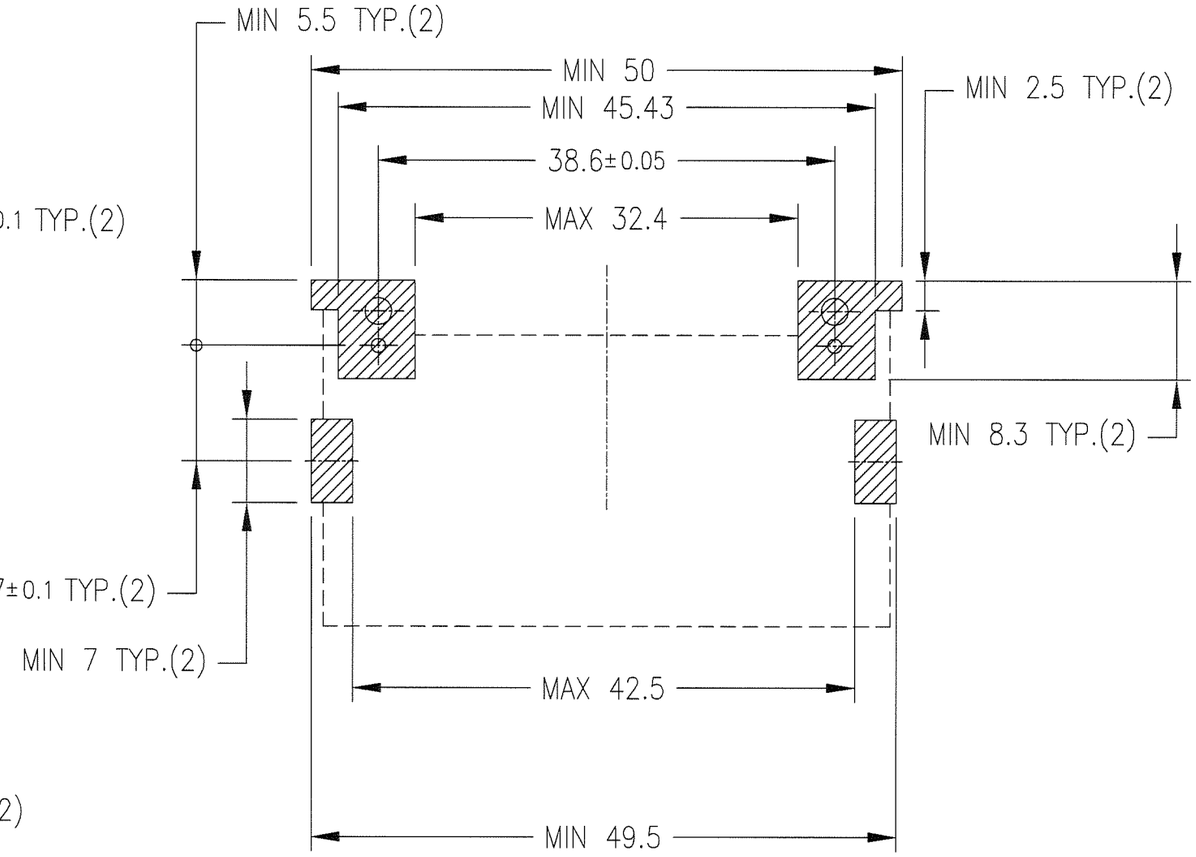

COMPONENT REFLOW KEEP OUT ZONE

NOTE
1.PRODUCT SPECIFICATION : 110-404
2.PACKAGING SPECIFICATION : GES-14-620
3.RECOMMENDED TIGHTENING TORQUE : 0.127N.m [1.3kgf.cm]
4.SOLDER TAIL CO-PLANARITY : MAX 0.1
5.RECOMMENDED HOLD-DOWN SCREW
M 2mm X 6mm SCREWS(FCI P/N ; 95121-001)
FOR 0.062in/1.57mm THICK PCB
6,FOR LEAD FREE P/N, THE PRODUCT MEETS EUROPEAN UNION DIRECTIVES AND OTHER COUNTRY REGULATIONS AS DESCRIBED IN GS-22-008.
D 7.THE HOUSING WILL WITHSTAND EXPOSURE TO 260°C PEAK TEMPERATURE FOR 10 SECONDS IN A CONVENTION, INTRA-RED OR VAPOR PHASE REFLOW OVEN.
E 8.MEASURED AT THE BOTTOM.

mat'l. code	surface	tolerance	projection	product family	CODE
---	ISO 1302	ISO 406 ISO 1101		5AZF - CF HEADER	JP

ltr	description	ecn no	dr	date	tolerances unless otherwise specified			
1	RELEASED		HS	9/12/'02	angles	linear	0.X	±0.3
A	RELEASED	J20659	HS	12/25/'02			0.XX	±0.3
B	REVISED	J05-0748	R.S	10/31/'05	0°±2°		0.XXX	±0.3
C	REVISED	J06-0315	R.S	8/1/'06	dr	S.WATANABE	7/28/'08	
D	REVISED	J06-0399	R.S	10/20/'06	engr	S.WATANABE	7/28/'08	
E	REVISED	J08-0316	S.W	7/28/'08	chr	[signature]	2008-7-29	
					appd	[signature]	2008-7-29	

mm
scale 2:1

title: COMPACT FLASH HDR TOP MOUNT

dwg no: 62453 — sheet 6 of 8 — size: A3

type: Product Customer Drawing

sheet index — revision — sheet

Rev. E

FCIconnect.com
Copyright FCI.

form: A3

PDM: Rev:L STATUS:Released Printed: Aug 12, 2008

PRODUCT NO.	REMARKS
62453-622LF	WITHOUT METAL PLATE(M2 SCREWS) △1

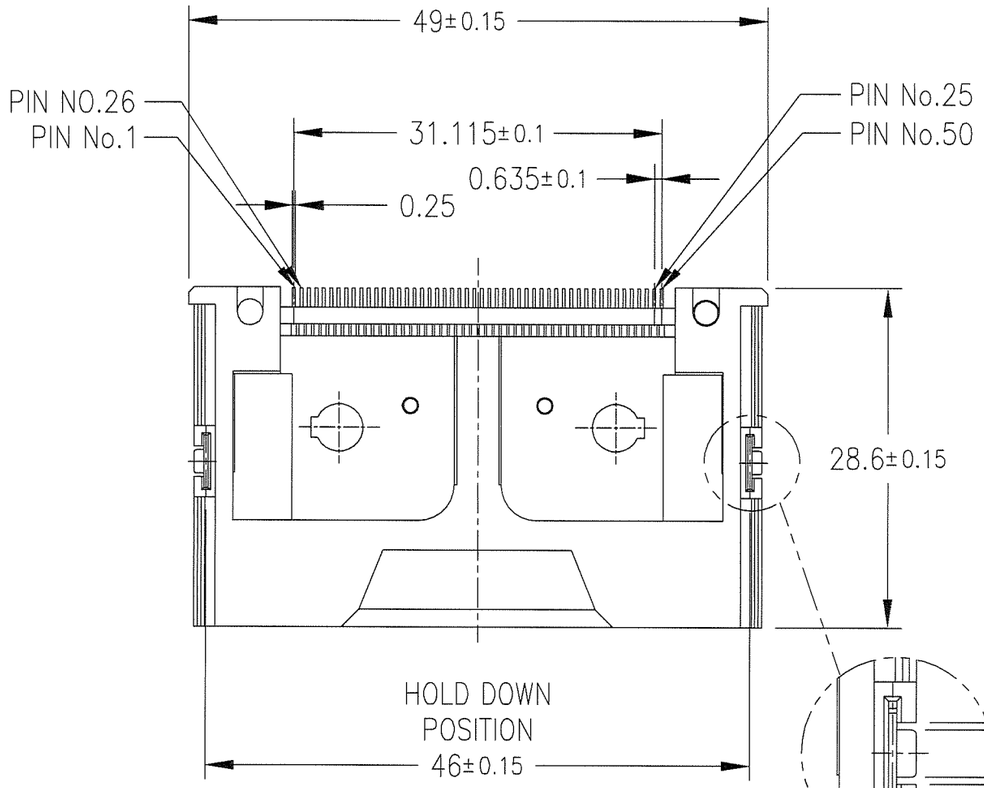

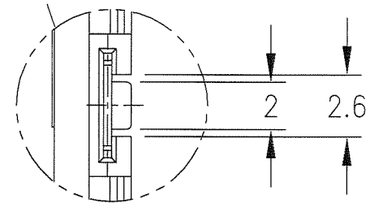

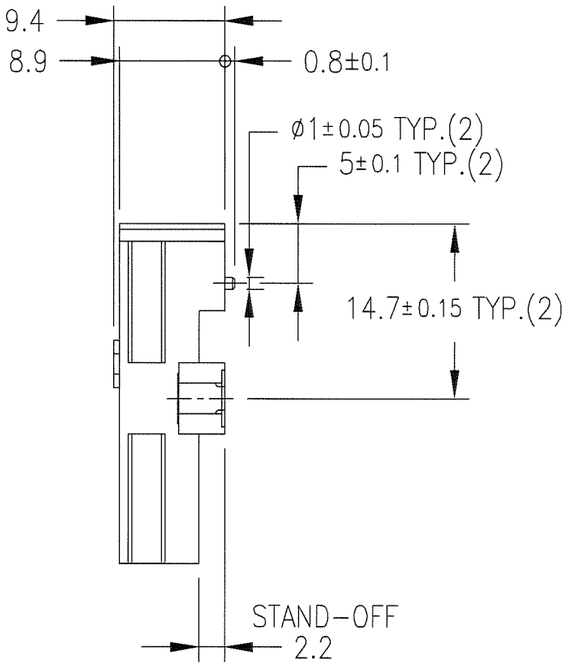

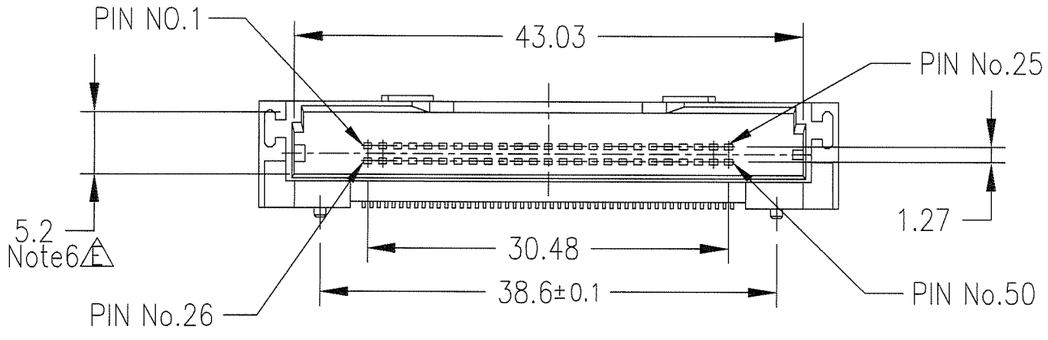

△D

	COMPONENT	MATERIAL	FINISH	QTY.
①	HOUSING	FLAME RETARDANT RESIN	NONE (BLACK)	1
②	PIN	PHOSPHOR BRONZE	UNDER : 1.0μm MIN. Ni CONTACT AREA : 0.76μm MIN. Au SOLDER TAIL : 0.05μm MIN. Au	50
③	HOLD DOWN	PHOSPHOR BRONZE △C	UNDER : 1.27μm MIN. Ni SOLDER TAIL : 2.0μm MIN. Sn	2

mat'l. code ---

ltr	description	ecn no	dr	date
A	RELEASED	J05-0357	M.H	6/16/'05
B	REVISED	J05-0748	R.S	10/31/'05
C	REVISED	J06-0315	R.S	8/1/'06
D	REVISED	J06-0399	R.S	10/20/'06
E	REVISED	J08-0316	S.W	7/28/'08

dr	S.WATANABE	7/28/'08
engr	S.WATANABE	7/28/'08
chr	H.Watanabe	2008-7-29
appd	S.Ohdaira	2008-7-29

surface ISO 1302 ✓ | tolerance ISO 406 ISO 1101 | projection

tolerances unless otherwise specified

angles	linear		
0°±2°		0.X	±0.3
		0.XX	±0.3
		0.XXX	±0.3

mm | scale 2:1

product family: 5AZF – CF HEADER | CODE JP

title: COMPACT FLASH HDR TOP MOUNT

dwg no 62453 | sheet 7 of 8 | size A3

type: Product Customer Drawing

sheet index	revision
sheet	E

Rev. E

FCIconnect.com
Copyright FCI.

form: A3

PDM: Rev:L STATUS:Released Printed: Aug 12, 2008

PRODUCT NO.	REMARKS
62453-622LF	WITHOUT METAL PLATE(M2 SCREWS) D

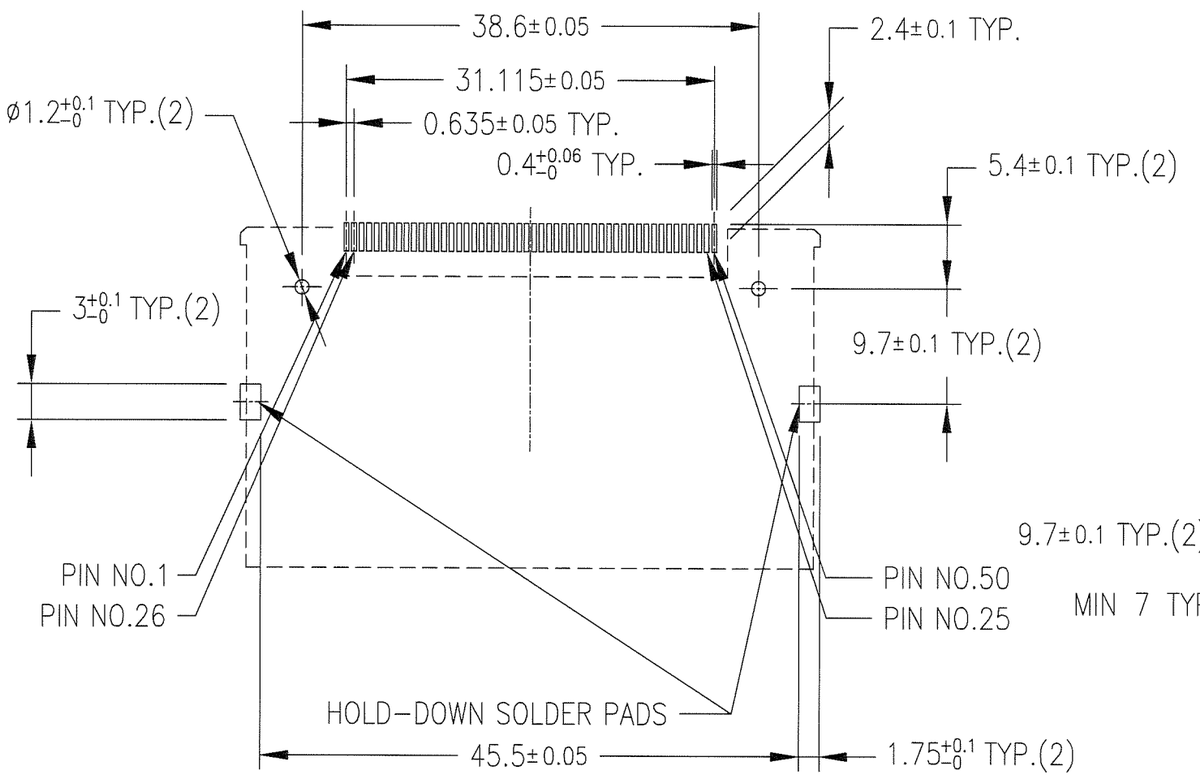

RECOMMENDED P.C.B. LAYOUT

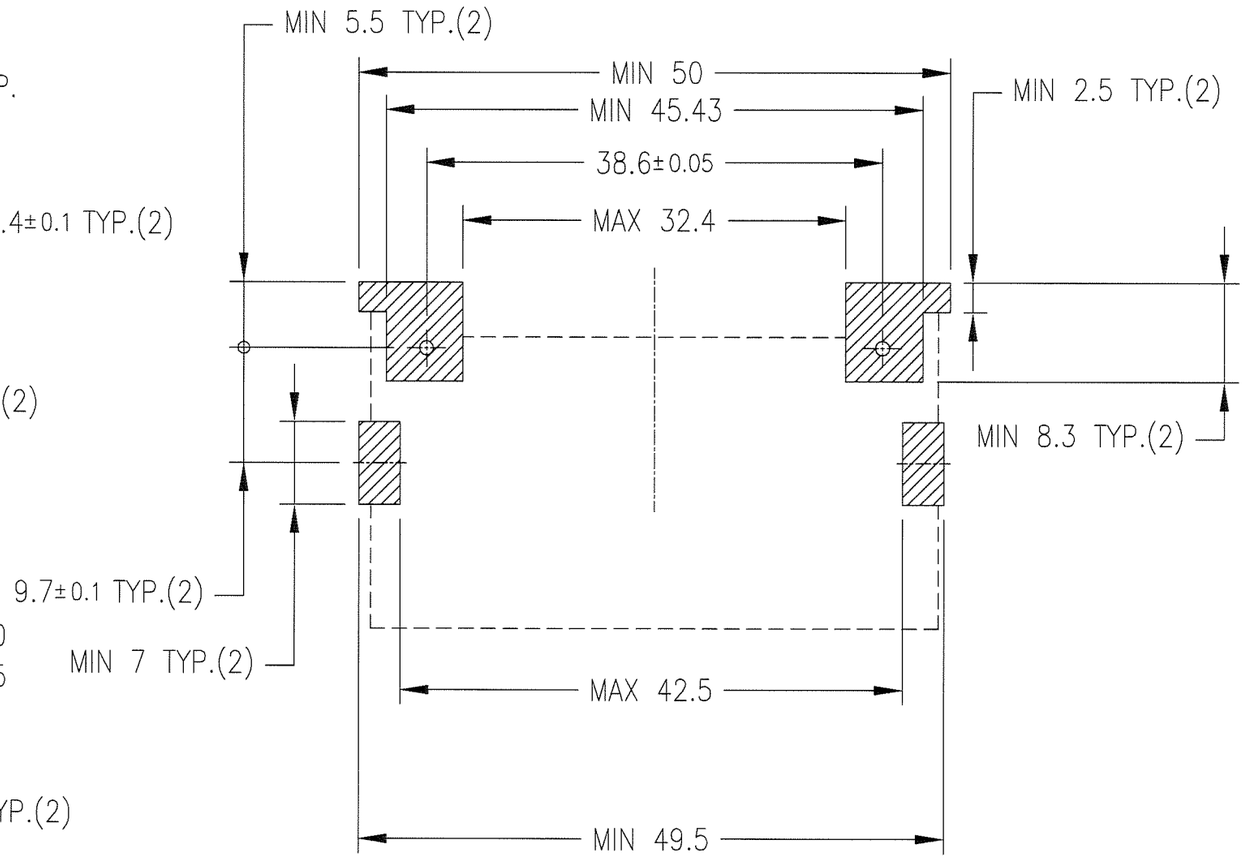

COMPONENT REFLOW KEEP OUT ZONE

NOTE
1.PRODUCT SPECIFICATION : 110-404
2.PACKAGING SPECIFICATION : GES-14-620
3.SOLDER TAIL CO-PLANARITY : MAX 0.1
4,FOR LEAD FREE P/N, THE PRODUCT MEETS EUROPEAN UNION DIRECTIVES AND OTHER COUNTRY REGULATIONS AS DESCRIBED IN GS-22-008.
D 5.THE HOUSING WILL WITHSTAND EXPOSURE TO 260°C PEAK TEMPERATURE FOR 10 SECONDS IN A CONVENTION, INTRA-RED OR VAPOR PHASE REFLOW OVEN.
E 6.MEASURED AT THE BOTTOM.

mat'l. code	surface	tolerance	projection	product family	CODE
---	ISO 1302 √	ISO 406 ISO 1101		5AZF - CF HEADER	JP

ltr	description	ecn no	dr	date	tolerances unless otherwise specified			
A	RELEASED	J05-0357	M.H	6/16/'05	angles	linear	0.X	±0.3
B	REVISED	J05-0748	R.S	10/31/'05			0.XX	±0.3
C	REVISED	J06-0315	R.S	8/1/'06	0°±2°		0.XXX	±0.3
D	REVISED	J06-0399	R.S	10/20/'06	dr	S.WATANABE	7/28/'08	
E	REVISED	J08-0316	S.W	7/28/'08	engr	S.WATANABE	7/28/'08	
					chr	[signature]	2008-7-29	
					appd	[signature]	2008-7-29	

mm
scale 2:1

title
COMPACT FLASH HDR
TOP MOUNT

dwg no 62453 sheet 8 of 8 size A3

type Product Customer Drawing

sheet index | revision | sheet | Rev. E

FCIconnect.com

Copyright FCI.

form: A3

PDM: Rev:L STATUS:Released Printed: Aug 12, 2008