THIS DRAWING IS UNPUBLISHED. RELEASED FOR PUBLICATION –,– .
© COPYRIGHT – By – ALL RIGHTS RESERVED.

LOC	DIST
AF	50

REVISIONS

P	LTR	DESCRIPTION	DATE	DWN	APVD
	K1	REVISED PER ECR–15–004720	08JUN2015	GRZ	RP

1 CONTINUOUS STRIP ON REELS

△2 REVERSE REELING FROM 62445–2.

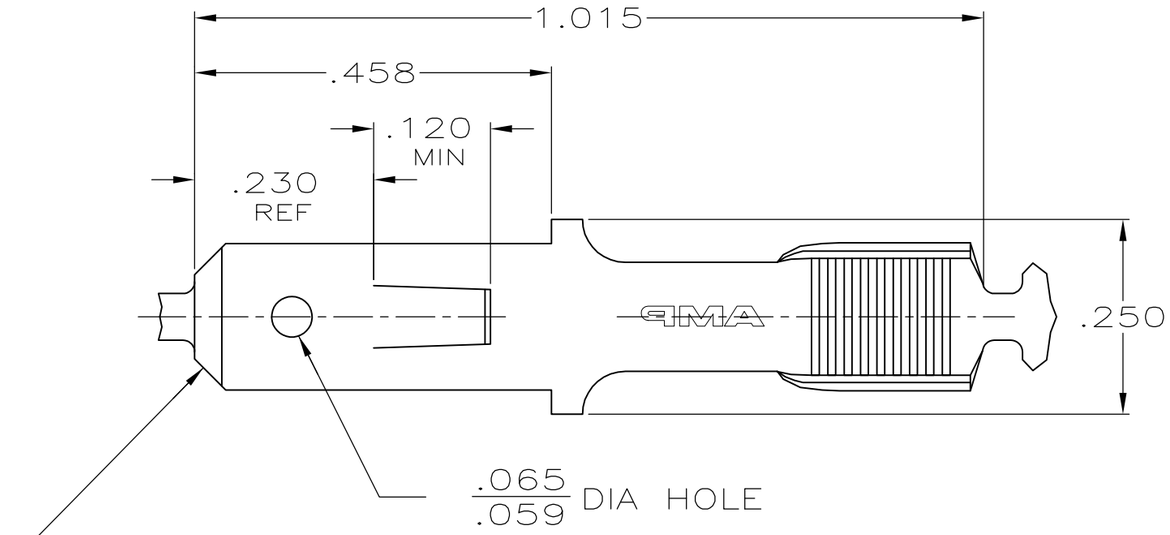

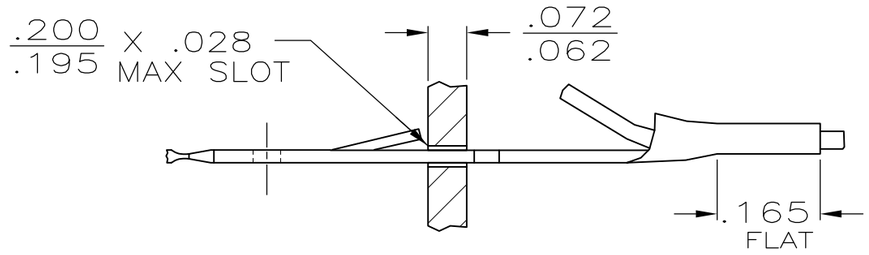

INSTALLED VIEW
PIGTAIL CRIMP

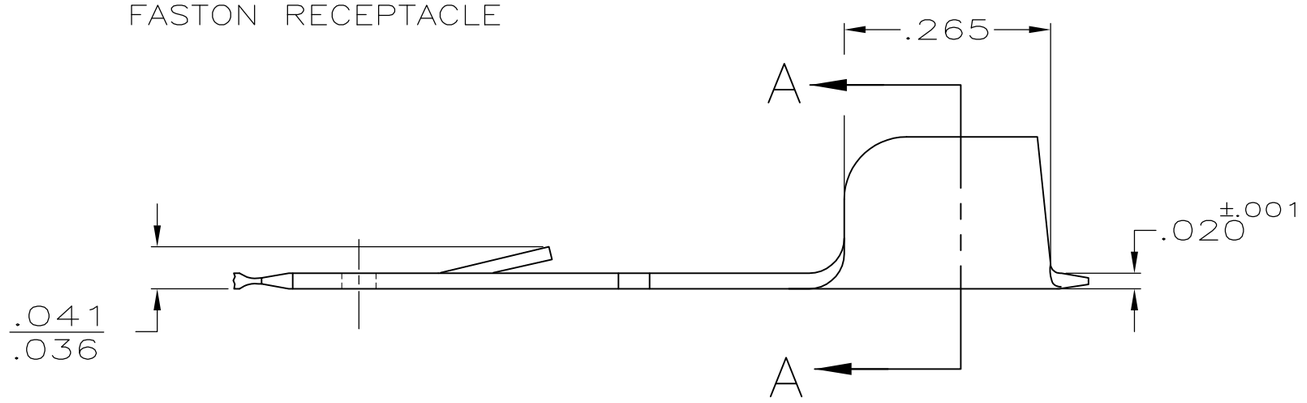

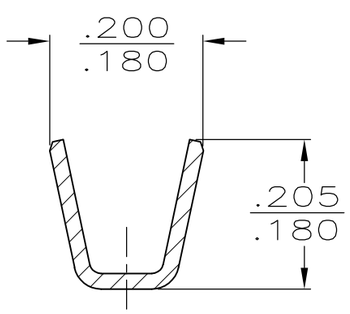

SECTION A–A

WIRE SIZE	FINISH	PART NO
#15–12 MAGNET WIRE 3000 – 7000 CMA	TIN / VARNISH RESIST	△2 62445–3
		62445–2
	TIN .000080 MIN	62445–1

THIS DRAWING IS A CONTROLLED DOCUMENT.

DIMENSIONS: INCHES

TOLERANCES UNLESS OTHERWISE SPECIFIED:
0 PLC ± –
1 PLC ± –
2 PLC ± –
3 PLC ± .015
4 PLC ± –
ANGLES ± –

MATERIAL: BRASS

FINISH: SEE TABLE

DWN	JR RUTH	11/7/91
CHK	MS FEHER	11/7/91
APVD	J GILLESPIE	11/7/91
PRODUCT SPEC	—	
APPLICATION SPEC	—	
WEIGHT	—	

CUSTOMER DRAWING

TE Connectivity

NAME: TAB, AMPLIVAR, FASTIN–FASTON, .187 SERIES

SIZE	CAGE CODE	DRAWING NO	RESTRICTED TO
A3	00779	C–62445	—

SCALE	SHEET	REV
5:1	1 OF 1	K1