Impact™ Backplane Module Installation Press-In Tool

molex

Application Tooling Specification Sheet

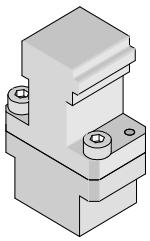

Order No. 62201-8787

FEATURES

- Polarized tool prevents product damage
- Tool provides uniform distribution of press force across entire pin array
- May be used as a stand-alone tool or mounted in an optional holder with other Molex press-in tools

SCOPE

Products: Impact™ Backplane Signal Module Assembly, 170335 Series, (4-Pair by 8 Column 85 Ohm Assemblies). See Product List below for specific part numbers.

Product List

The following is a partial list of the product order numbers and their specifications this tool is designed to run. Updates to this list are available on www.molex.com.

4 Pair 170335 Series Numbers							
Guide Style	Columns	Assembly Order Number					
Unguided	8	170335-1803	170335-1804	170335-1805	170335-1806	170335-1807	170335-1808
		170335-1813	170335-1814	170335-1815	170335-1816	170335-1817	170335-1818
		170335-1823	170335-1824	170335-1825	170335-1826	170335-1827	170335-1828
		170335-1833	170335-1834	170335-1835	170335-1836	170335-1837	170335-1838
Left	8	170335-2803	170335-2804	170335-2805	170335-2806	170335-2807	170335-2808
		170335-2813	170335-2814	170335-2815	170335-2816	170335-2817	170335-2818
		170335-2823	170335-2824	170335-2825	170335-2826	170335-2827	170335-2828
		170335-2833	170335-2834	170335-2835	170335-2836	170335-2837	170335-2838
		170335-2843	170335-2844	170335-2845	170335-2846	170335-2847	170335-2848
		170335-2853	170335-2854	170335-2855	170335-2856	170335-2857	170335-2858
		170335-2863	170335-2864	170335-2865	170335-2866	170335-2867	170335-2868
		170335-2873	170335-2874	170335-2875	170335-2876	170335-2877	170335-2878
		170335-2883	170335-2884	170335-2885	170335-2886	170335-2887	170335-2888
		170335-6803	170335-6804	170335-6805	170335-6806	170335-6807	170335-6808
		170335-6813	170335-6814	170335-6815	170335-6816	170335-6817	170335-6818
		170335-6823	170335-6824	170335-6825	170335-6826	170335-6827	170335-6828
		170335-6833	170335-6834	170335-6835	170335-6836	170335-6837	170335-6838
		170335-6843	170335-6844	170335-6845	170335-6846	170335-6847	170335-6848
		170335-6853	170335-6854	170335-6855	170335-6856	170335-6857	170335-6858
		170335-6863	170335-6864	170335-6865	170335-6866	170335-6867	170335-6868
		170335-6873	170335-6874	170335-6875	170335-6876	170335-6877	170335-6878
		170335-6883	170335-6884	170335-6885	170335-6886	170335-6887	170335-6888
Right	8	170335-4803	170335-4804	170335-4805	170335-4806	170335-4807	170335-4808
		170335-4813	170335-4814	170335-4815	170335-4816	170335-4817	170335-4818
		170335-4823	170335-4824	170335-4825	170335-4826	170335-4827	170335-4828
		170335-4833	170335-4834	170335-4835	170335-4836	170335-4837	170335-4838

4 Pair 170335 Series Numbers							
Guide Style	Columns	Assembly Order Number					
Right	8	170335-4843	170335-4844	170335-4845	170335-4846	170335-4847	170335-4848
		170335-4853	170335-4854	170335-4855	170335-4856	170335-4857	170335-4858
		170335-4863	170335-4864	170335-4865	170335-4866	170335-4867	170335-4868
		170335-4873	170335-4874	170335-4875	170335-4876	170335-4877	170335-4878
		170335-4883	170335-4884	170335-4885	170335-4886	170335-4887	170335-4888
		170335-8803	170335-8804	170335-8805	170335-8806	170335-8807	170335-8808
		170335-8813	170335-8814	170335-8815	170335-8816	170335-8817	170335-8818
		170335-8823	170335-8824	170335-8825	170335-8826	170335-8827	170335-8828
		170335-8833	170335-8834	170335-8835	170335-8836	170335-8837	170335-8838
		170335-8843	170335-8844	170335-8845	170335-8846	170335-8847	170335-8848
		170335-8853	170335-8854	170335-8855	170335-8856	170335-8857	170335-8858
		170335-8863	170335-8864	170335-8865	170335-8866	170335-8867	170335-8868
		170335-8873	170335-8874	170335-8875	170335-8876	170335-8877	170335-8878
		170335-8883	170335-8884	170335-8885	170335-8886	170335-8887	170335-8888

Tool Setup

Depending on the number of connectors to be installed and/or the press used, this tool can be used alone or with a group of press-in tools, mounted in a 62201-95XX rail (ordered separately). See Figure 1.

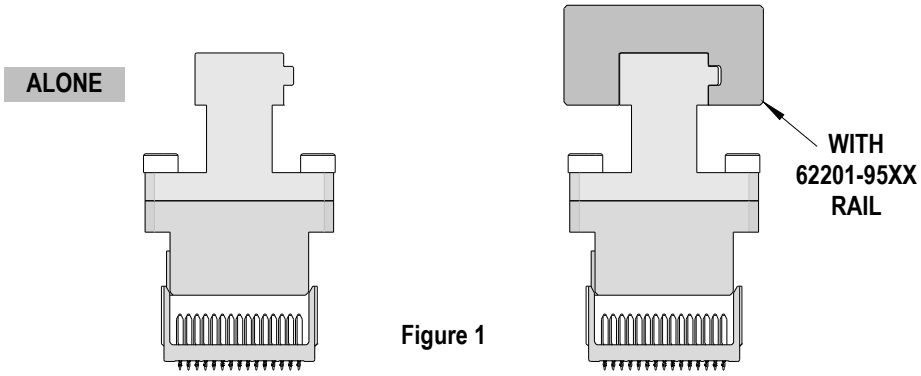

Figure 1

Tool Installation

The 62201-95XX rail is available in a variety of lengths to accommodate multiple press-in tools.

Rail Part Number	Rail Overall Length
62201-9501	24mm (0.94 in)
62201-9502	72mm (2.83 in)
62201-9503	156mm (6.14 in)
62201-9504	216mm (8.50 in)
62201-9509	254mm (10.0 in)
62201-9511	305mm (12.0 in)

Reference: This Press-In Tool is 15.1mm (0.59 in.) long.

Printed Circuit Board (PCB) Support

The Impact™ connectors require up to 3.6kg (8 lb) of force per pin to press into the PCB. To prevent excessive PCB flexure and/or damage to the PCB, a support plate is strongly recommended directly beneath the connector hole pattern.

Due to the custom nature of every application, Molex does not offer any PCB support plate. The customer must furnish their own support plate.

When creating the PCB support plate, remember to allow clearance for the connector pins as they pass through the PCB thickness.

Press Equipment Recommendations

Many types of presses can be used to install Impact™ connectors, but to assure consistent connector installation Molex recommends the following press criteria:

1. The capability to detect force variations as low as 4.5kg (10 lb) during the press-in cycle; excessive force measurements should stop the press-in cycle.
2. The rate of pressing can be regulated as low as 0.13mm (0.005 in) per second.
3. Press stroke control to within 0.25mm (0.010 in).
4. Total press stroke must be at least 19mm (0.75 in).
5. For statistical purposes, automatic collection of force and distance data.

Tool Operation

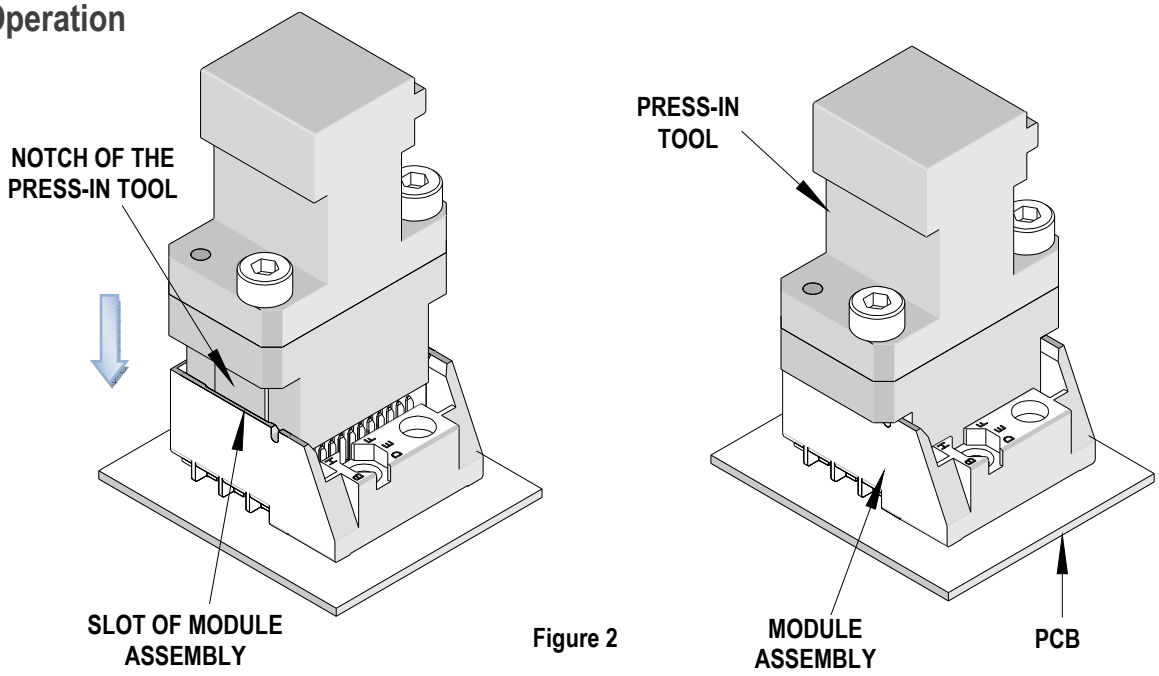

Figure 2

1. Insert by hand the backplane signal module assembly (s) carefully into the PCB hole pattern. Make sure the connector(s) are oriented properly by confirming the location of the #1 circuit notch with respect to the PCB layout.
2. Insert the Press-In Tool making sure that the notch in this tool is inserted into the slot on top of the connector housing of the backplane signal module assembly. See Figure 2.
3. Using the application tool and an appropriate press, seat the header assembly until there is less than 0.10mm (.004 in) clearance between the bottom of the plastic housing and the surface of the PCB. See Figure 3.

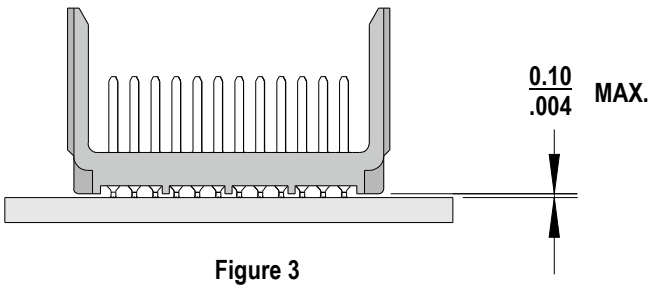

Figure 3

There should be no broken stand-offs along the perimeter of the part (an indication of over-pressing).

CAUTION: To prevent injury, never operate any press without the guards in place. Refer to the press manufacturer's instruction manual.

CAUTION: Molex application tooling specifications are valid only when used with Molex connectors and tooling.

Contact Information

For more information on Molex application tooling please contact Molex at 1-800-786-6539.

Visit our Web site at http://www.molex.com