This document was generated on 12/08/2014

PLEASE CHECK WWW.MOLEX.COM FOR LATEST PART INFORMATION

Part Number: 62201-8668

Status: Active

Description: Press-In Tool for Power Module Assembly

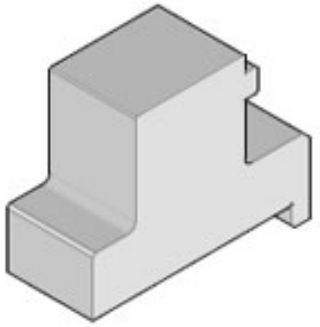

Series image - Reference only

Documents:
RoHS Certificate of Compliance (PDF)

General

Product Family	Application Tooling
Series	T9999
Function	Insertion
Geographic Area	Global
Level of Automation	Manual
More Detailed Tech Information	applicationtooling@molex.com
Product Name	Impact™
Survey	www.molex.com//review/apptool_survey.html
Tool Type	Handtool
UPC	884982116269

Material Info

Reference - Drawing Numbers

Application Tooling Documents	ATS-622018668, TM-622018799

EU RoHS
ELV and RoHS Compliant
REACH SVHC
Not Reviewed
Low-Halogen Status
Not Reviewed

China RoHS

Need more information on product environmental compliance?

Email productcompliance@molex.com
For a multiple part number RoHS Certificate of Compliance, click here

Please visit the Contact Us section for any non-product compliance questions.

Search Parts in this Series
T9999Series

Use With
78215 Impact™ Power Module Assembly, Right Angle, 5-Pair Assemblies

This document was generated on 12/08/2014

PLEASE CHECK WWW.MOLEX.COM FOR LATEST PART INFORMATION