IMPEL Backplane Module Installation Press-In Tool

molex

Application Tooling Specification Sheet

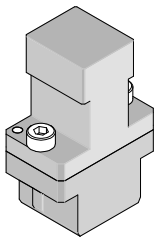

Order No. 62100-9640

FEATURES

- Polarized tool prevents product damage
- Tool provides uniform distribution of press force across entire pin array
- May be used as a stand-alone tool or mounted in an optional holder with other Molex press-in tools
- Use tool 62201-8916 for removing connectors

SCOPE

Products: IMPEL (3.0mm pitch) Backplane Assembly, (4-Pair by 6 Column Assemblies).
See Product List below for specific part numbers.

Product List

The following is a partial list of the product order numbers and their specifications this tool is designed to run. Updates to this list are available on www.molex.com.

171325 Series Numbers					
Guide Style	**Columns**	**Assembly Order Number**			
Unguided	6	171325-1604	171325-1605	171325-1607	171325-1608

Tool Setup

Depending on the number of connectors to be installed and/or the press used, this tool can be used alone or with a group of press-in tools, mounted in a 62201-95XX rail (ordered separately). See Figure 1.

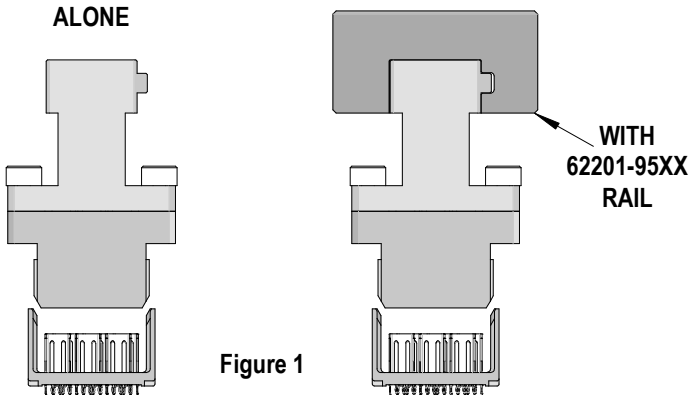

Figure 1

Tool Installation

The 62201-95XX rail is available in a variety of lengths to accommodate multiple press-in tools.

Rail Part Number	Rail Overall Length
62201-9501	24mm (0.94 in)
62201-9502	72mm (2.83 in)
62201-9503	156mm (6.14 in)
62201-9504	216mm (8.50 in)
62201-9509	254mm (10.0 in)
62201-9511	305mm (12.0 in)

Reference: This Press-In Tool is 17.80mm (0.70 in.) long.

Printed Circuit Board (PCB) Support

The IMPEL connectors require up to 3.6kg (8 lb) of force per pin to press into the PCB. To prevent excessive PCB flexure and/or damage to the PCB, a support plate is strongly recommended directly beneath the connector hole pattern.

Due to the custom nature of every application, Molex does not offer any PCB support plate. The customer must furnish their own support plate.

When creating the PCB support plate, remember to allow clearance for the connector pins as they pass through the PCB thickness.

Press Equipment Recommendations

Many types of presses can be used to install IMPEL connectors, but to assure consistent connector installation Molex recommends the following press criteria:

1. The capability to detect force variations as low as 4.5kg (10 lb) during the press-in cycle; excessive force measurements should stop the press-in cycle.
2. The rate of pressing can be regulated as low as 0.13mm (0.005 in) per second.
3. Press stroke control to within 0.25mm (0.010 in).
4. Total press stroke must be at least 19mm (0.75 in).
5. For statistical purposes, automatic collection of force and distance data.

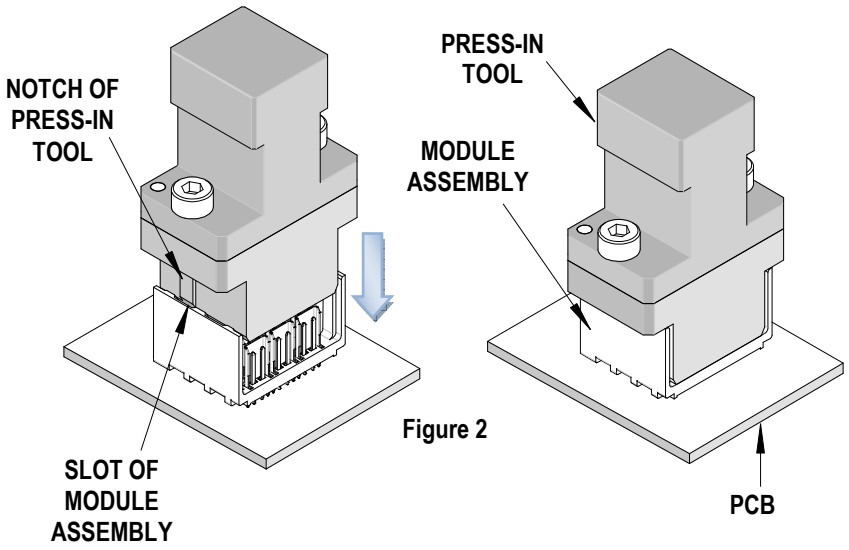

Figure 2

Tool Operation

1. Insert by hand the backplane signal module assembly (s) carefully into the PCB hole pattern. Make sure the connector(s) are oriented properly by confirming the location of the #1 circuit notch with respect to the PCB layout.
2. Insert the Press-In Tool making sure that the notch in this tool is inserted into the slot on top of the connector housing of the backplane signal module assembly. See Figure 2.
3. Using the application tool and an appropriate press, seat the header assembly until there is less than 0.10mm (.004 in) clearance between the bottom of the plastic housing and the surface of the PCB. See Figure 3.

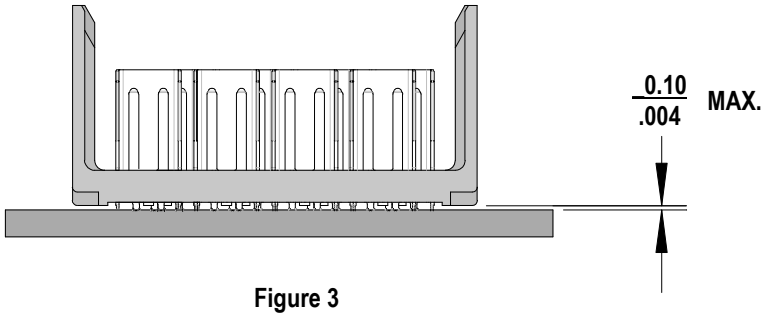

Figure 3

There should be no broken stand-offs along the perimeter of the part (an indication of over-pressing).

CAUTION: To prevent injury, never operate any press without the guards in place. Refer to the press manufacturer's instruction manual.

CAUTION: Molex application tooling specifications are valid only when used with Molex connectors and tooling.

Contact Information

For more information on Molex application tooling please contact Molex at 1-800-786-6539.

http://www.molex.com