IEC Appliance Inlet C14/C18, Snap-in Mounting, Front Side, Solder or Quick-connect or Screw-on Terminal



Snap-in version

C14 70° C

C18 70° C

See below:
Approvals and Compliances

Description

- Panel mount :
  Snap-in version , Front Side
- 1 Function :

- Appliance Inlet , Pin temperature 70 °C , protection class I or II
- Solder, Quick Connect or Screw Terminals

Weblinks

pdf datasheet, html-datasheet, General Product Information, Distributor-Stock-Check, Accessories, Detailed request for product

Technical Data

Ratings IEC	10 A / 250 VAC; 50/60 Hz
Ratings UL/CSA	15 A / 250 VAC; 60 Hz
Dielectric Strength	> 2.5 kVAC between L-N > 1.5 kVAC between L/N-PE (1 min/50 Hz)
Allowable Operation Temperature	-25 °C to 70 °C
IP-Protection	from front side IP 20 acc. to IEC 60529
Insulation cover	Suitable for appliances with protection class I or II acc. to IEC 61140
Terminal	Solder, Quick Connect or Screw Terminals
Panel Thickness S	Snap-in version 0.8 - 1.5/1.6 - 2.0 mm
Material: Housing	PA6, black or grey, UL 94V-0

appliance inlet/-outlet	C14 / C18 acc. to IEC 60320-1 UL 60320-1, CSA C22.2 no. 60320-1 (for cold conditions) pin-temperature 70 °C, 10 A, Protection Class I or II

Approvals and Compliances

Detailed information on product approvals, code requirements, usage instructions and detailed test conditions can be looked up in Details about Approvals

Approvals

The approval mark is used by the testing authorities to certify compliance with the safety requirements placed on electronic products.

Approval Reference Type: 1061

Approval Logo	Certificates	Certification Body	Description
	VDE Approvals	VDE	Certificate Number: 40011871
	UL Approvals	UL	UL File Number: E96454
	CSA Approvals	CSA	CSA Certification Record: 27324
	CQC Approvals	CQC	CCC Certificate Number: 2012010204576576

Product standards

Product standards that are referenced

Organization	Design	Standard	Description
IEC	Designed according to	IEC 60320-1	Appliance couplers for household and similar general purposes
UL	Designed according to	UL 60320-1	Standard for Attachment Plugs and Receptacles
CSA Group	Designed according to	CSA C22.2 no. 60320-1	General Use Receptacles, Attachment Plugs, and Similar Wiring Devices

Application standards

Application standards where the product can be used

Organization	Design	Standard	Description
IEC	Designed for applications acc.	IEC/UL 60950	IEC 60950-1 includes the basic requirements for the safety of information technology equipment.

Compliances

The product complies with following Guide Lines

Identification	Details	Initiator	Description
CE	CE declaration of conformity	SCHURTER AG	The CE marking declares that the product complies with the applicable requirements laid down in the harmonisation of Community legislation on its affixing in accordance with EU Regulation 765/2008.
RoHS COMPLIANT	RoHS	SCHURTER AG	EU Directive RoHS 2011/65/EU
China RoHS	China RoHS	SCHURTER AG	The law SJ / T 11363-2006 (China RoHS) has been in force since 1 March 2007. It is similar to the EU directive RoHS.
REACH	REACH	SCHURTER AG	On 1 June 2007, Regulation (EC) No 1907/2006 on the Registration, Evaluation, Authorization and Restriction of Chemicals 1 (abbreviated as "REACH") entered into force.

Dimensions [mm]

Quick connect or solder terminals

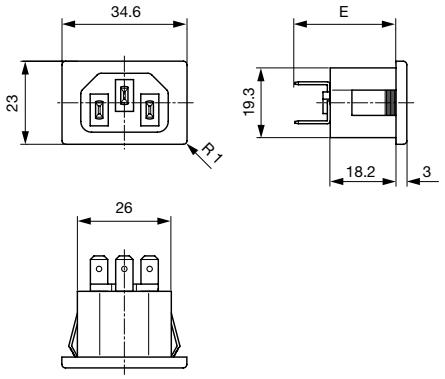

Wandstärke panel thickness	Ausbruchmasse panel cutout
0.8 -1.5 mm	$28.8^{+0.2}$ x $19.4^{+0.2}$ mm
1.6 - 2.0 mm	$29.6^{+0.2}$ x $19.4^{+0.2}$mm

E: Solder terminals short: 23.7 mm
E: Solder terminals long: 27.1 mm
E: Quick connect terminals 4.8x0.8 mm: 27.9 mm
E: Quick connect terminals 6.3x0.8 mm: 28.9 mm

Bolts and nuts

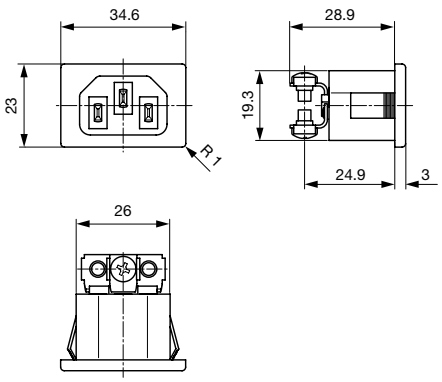

Wandstärke panel thickness	Ausbruchmasse panel cutout
0.8 -1.5 mm	$28.8^{+0.2}$ x $19.4^{+0.2}$ mm
1.6 - 2.0 mm	$29.6^{+0.2}$ x $19.4^{+0.2}$mm

Config. Code

1061 - H - A B C 0- D - E O

The characters are placeholders for the correspondingly keys of selections from the key tables.

1061 - **H** - A B C 0- D - E O = Type

Type	Configuration key
protection class II	B
protection class I	X

1061 - H - **A** B C 0- D - E O = Terminals

Terminal L		Configuration key
short solder terminal (L = 4.8 mm)		2
long solder terminal (L = 8.5 mm)		3
Blade terminal (4.8 x 0.8 mm)		8
Blade terminal (6.3 x 0.8 mm)		9
screw terminal		A

1061 - H - A **B** C 0- D - E O = Terminals

Terminal N	Configuration key
short solder terminal (L = 4.8 mm)	2
long solder terminal (L = 8.5 mm)	3
Blade terminal (4.8 x 0.8 mm)	8
Blade terminal (6.3 x 0.8 mm)	9
screw terminal	A

Symbols similar as in table A

1061 - H - A B **C** 0- D - E O = Terminals

Terminal Ground	Configuration key
without terminal	0
short solder terminal (L = 4.8 mm)	2
long solder terminal (L = 8.5 mm)	3
Blade terminal (4.8 x 0.8 mm)	8
Blade terminal (6.3 x 0.8 mm)	9
screw terminal	A

Symbols similar as in table A

1061 - H - A B C 0- **D** - E O = Color

Color	Configuration key
Black	A
Grey	B

1061 - H - A B C 0- D - **E** O = Style

Style	Configuration key
snap-in standard type	3

1061 - H - A B C 0- D - E **O** = Features

Features	Configuration key
without V-Lock	
V-Lock	V

All Variants

Type	Terminals L / N	Terminal Ground	Color	Style	Features	Config. Code	Order Number
protection class II	short solder terminal (L = 4.8 mm)	without terminal	Black	snap-in standard type	-	1061-B-2200-A-3	6162.0003
protection class II	Blade terminal (6.3 x 0.8 mm)	without terminal	Black	snap-in standard type	-	1061-B-9900-A-3	6162.0004
protection class I	short solder terminal (L = 4.8 mm)	short solder terminal (L = 4.8 mm)	Black	snap-in standard type	-	1061-X-2220-A-3	6162.0005
protection class I	short solder terminal (L = 4.8 mm)	short solder terminal (L = 4.8 mm)	Grey	snap-in standard type	-	1061-X-2220-B-3	6162.0006
protection class I	long solder terminal (L = 8.5 mm)	long solder terminal (L = 8.5 mm)	Black	snap-in standard type	-	1061-X-3330-A-3	6162.0007
protection class I	long solder terminal (L = 8.5 mm)	long solder terminal (L = 8.5 mm)	Grey	snap-in standard type	-	1061-X-3330-B-3	6162.0008
protection class I	Blade terminal (4.8 x 0.8 mm)	Blade terminal (4.8 x 0.8 mm)	Black	snap-in standard type	-	1061-X-8880-A-3	6162.0009
protection class I	Blade terminal (6.3 x 0.8 mm)	Blade terminal (6.3 x 0.8 mm)	Black	snap-in standard type	-	1061-X-9990-A-3	6162.0010
protection class I	Blade terminal (6.3 x 0.8 mm)	Blade terminal (6.3 x 0.8 mm)	Grey	snap-in standard type	-	1061-X-9990-B-3	6162.0011

Type	Terminals L / N	Terminal Ground	Color	Style	Features	Config. Code	Order Number
protection class II	long solder terminal (L = 8.5 mm)	without terminal	Black	snap-in standard type		1061-B-3300-A-3	6162.0160

The listet variants should be available from stock Other versions on request www.schurter.com/contact

Most Popular.

Availability for all products can be searched real-time:https://www.schurter.com/en/Stock-Check/Stock-Check-SCHURTER

Packaging unit 50 Pcs

Accessories



Description
Assorted Covers
Rear Cover

Mating Outlets/Connectors



Category / Description	
Connector Overview complete	
4782 Mounting: Power Cord, 3 x 1 mm² / 3 x 18 AWG, Cable, Connector: IEC C13	4782
4785 Mounting: Power Cord, 3 x 1 mm² / 3 x 18 AWG, Cable, Connector: IEC C13	4785
4300-06 Mounting: Power Cord, 3 x 1 mm² / 3 x 18 AWG, Cable, Connector: IEC C13	4300-06
IEC Connector C15 for hot conditions 120°C, Rewireable, Straight	4781
IEC Connector C15 for hot conditions 120°C, Rewireable, Angled	4784
Connector further types to 1061	...



Interconnection Cord Overview complete	
Cord Sets 10 A, Interconnection, 2.0 m, IEC H05VV-F3G1.0, black	6007.0204
Cord Sets 10 A, Interconnection, 1.0 m, Connector IEC C13, H05VV-F3G1.0, black	6007.0212
Cord Sets 10 A, Interconnection, 2.0 m, Connector IEC C13, H05VV-F3G1.0, black	6007.0214
Interconnection Cord further types to 1061	



Power Supply Cord Overview complete	
Cord Sets 10 A, Europlug, 2.5 m, Connector IEC C13, H05VV-F3G1.0, black	6004.0215
Cord Sets 10 A, Europlug, 2.5 m, Connector IEC C13, H05VV-F3G1.0, black	6003.0215
Cord Sets 10 A, uninsulated wires, 2.0 m, Connector IEC C13, H05VV-F3G1.0, black	6000.0224
Cord Sets 10 A, uninsulated wires, 2.0 m, Connector IEC C13, H05VV-F3G1.0, black	6000.0214
Cord Sets 10 A, United Kingdom, 2.5 m, Connector IEC C13, H05VV-F3G1.0, black	6044.0215
Power Supply Cord further types to 1061	...

Category / Description



Power Supply or Interconnection Cord Overview complete

Cord Sets 10 A, United Kingdom, 2.0 m, Connector IEC H05VV-F3G1.0, black	6044.0204

Power Supply or Interconnection Cord further types to 1061

Mating Outlets/Connectors shuttered



Power Cord Overview complete

Power cord with IEC connector C17, V-Lock, straight	VAC17KS

Power Cord further types to 1061

The specifications, descriptions and illustrations indicated in this document are based on current information. All content is subject to modifications and amendments. Information furnished is believed to be accurate and reliable. However, users should independently evaluate the suitability and test each product selected for their own applications.