IEC Appliance Inlet C16A, Screw-on Mounting, Front or Rear Side, Solder or Quick-connect Terminal



6120-3

C16 A

155° C

See below:
Approvals and Compliances

Description

- Panel mount :
  Screw-on mounting front / rear-side
- 1 Function
- Appliance Inlet , Pin temperature 155 °C , Protection class I
- Solder / Quick Connect

Other versions on request

- Quick connect terminals 4.8 x 0.8 mm
- Types for enhanced glow wire test requirements acc. IEC 60695-2-12 and -13 for the use in unattended household equipment acc. IEC 60335-1

Weblinks

pdf data sheet, html datasheet, General Product Information, Approvals, Distributor-Stock-Check, Accessories, Detailed request for product

Technical Data

Ratings IEC	10 A / 250 VAC; 50 Hz
Ratings UL/CSA	15 A / 250 VAC; 60 Hz
Dielectric Strength	> 2 kVAC between L-N > 2 kVAC between L/N-PE (1 min/50 Hz)
Allowable Operation Temperature	-25 °C to 155 °C
IP-Protection	front side IP40 acc. to IEC 60529
Protection against electric shock	Suitable for appliances with protection class I acc. to IEC 61140
Terminal	Solder / Quick Connect
Panel Thickness S	Screw: max 8 mm Mounting screw torque max 0.5 Nm
Material: Housing	Thermoplastic, black, UL 94V-0

Appliance inlet/-outlet	C16A acc. to IEC 60320-1, UL 60320-1, CSA C22.2 no. 60320-1 (for very hot conditions) pin-temperature 155 °C, 10 A, Protection Class I

Approvals and Compliances

Detailed information on product approvals, code requirements, usage instructions and detailed test conditions can be looked up in Details about Approvals

SCHURTER products are designed for use in industrial environments. They have approvals from independent testing bodies according to national and international standards. Products with specific characteristics and requirements such as required in the automotive sector according to IATF 16949, medical technology according to ISO 13485 or in the aerospace industry can be offered exclusively with customer-specific, individual agreements by SCHURTER.

Approvals

The approval mark is used by the testing authorities to certify compliance with the safety requirements placed on electronic products.

Approval Reference Type: 6120

Approval Logo	Certificates	Certification Body	Description
	VDE Approvals	VDE	Certificate Number: 40015595
	UL Approvals	UL	UL File Number: E96454
	CCC Approvals	CCC	CCC Certificate Number: 2014010204726618

Product standards

Product standards that are referenced

Organization	Design	Standard	Description
IEC	Designed according to	IEC 60320-1	Appliance couplers for household and similar general purposes
UL	Designed according to	UL 60320-1	Standard for Attachment Plugs and Receptacles
CSA Group	Designed according to	CSA C22.2 no. 60320-1	General Use Receptacles, Attachment Plugs, and Similar Wiring Devices

Application standards

Application standards where the product can be used

Organization	Design	Standard	Description
IEC	Designed for applications acc.	IEC/UL 62368-1	Audio/video, information and communication technology equipment - Part 1: Safety requirements

Compliances

The product complies with following Guide Lines

Identification	Details	Initiator	Description
CE	CE declaration of conformity	SCHURTER AG	The CE marking declares that the product complies with the applicable requirements laid down in the harmonisation of Community legislation on its affixing in accordance with EU Regulation 765/2008.
UKCA	UKCA declaration of conformity	SCHURTER AG	The UKCA marking declares that the product complies with the applicable requirements laid down in the British Amendment of Regulation (EC) 765/2008.
RoHS	RoHS	SCHURTER AG	Directive RoHS 2011/65/EU, Amendment (EU) 2015/863
China RoHS	China RoHS	SCHURTER AG	The law SJ / T 11363-2006 (China RoHS) has been in force since 1 March 2007. It is similar to the EU directive RoHS.
REACH	REACH	SCHURTER AG	On 1 June 2007, Regulation (EC) No 1907/2006 on the Registration, Evaluation, Authorization and Restriction of Chemicals 1 (abbreviated as "REACH") entered into force.

Dimensions [mm]

6120-3

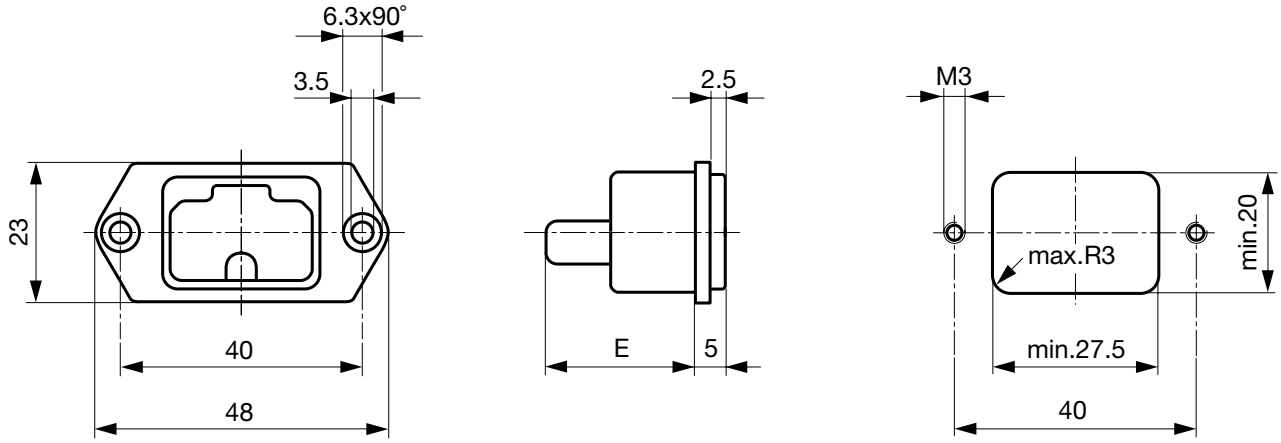

E: Solder terminals: 22.5 mm
E: Quick connect terminals: 25.5 mm

All Variants

Type	Panel mounting	Panel Thickness s [mm]	Terminal	Order Number
6120-3	Screw	-	Solder terminals 3.8 x 0.8 mm	6120.3100
6120-3	Screw	-	Quick connect terminals 4.8 x 0.8 mm	6120.3200
6120-3	Screw	-	Quick connect terminals 6.3 x 0.8 mm	6120.3300

Most Popular.

Availability for all products can be searched real-time:https://www.schurter.com/en/Stock-Check/Stock-Check-SCHURTER

Type	Panel mounting	Panel Thickness s [mm]	Terminal	Order Number

Articles for enhanced glow wire test requirements acc. IEC 60695-2-12 and -13 can be ordered with ending ".15" (xxxx.xxxx.15). They are suitable for the use in unattended household equipment acc. IEC 60335-1.

Packaging unit 50 Pcs

Accessories

	Description
	RC320 Rear Cover for Power Entry Module

Mating Outlets/Connectors

	Category / Description	
	Connector Overview complete	
	4771 Mounting: Power Supply Cord, 3 x 1 mm² / 3 x 14 AWG, Screw clamps, Connector: IEC C15A	4771
	4772 Mounting: 3 x 1 mm² / 3 x 14 AWG, Screw clamps, Connector: IEC C15A	4772

16.09.2021

The specifications, descriptions and illustrations indicated in this document are based on current information. All content is subject to modifications and amendments. Information furnished is believed to be accurate and reliable. However, users should independently evaluate the suitability and test each product selected for their own applications.