Pomona®

Model 6109
44 Pin SOIC Clip® Test Clip
Lead Spacing: 0.050” (1,27)

These new test clips are designed especially for in-circuit testing on 44 pin Small Outline Integrated Circuits (SOIC & SOJ). The SOIC Clip® test clip assures a positive connection to all chip leads and provides hands-free testing.

Upper contacts are .025" (0,63) sq. pins on 0.100" (2,54) centers. Pins are perfect for sq. pin receptacles, wire-wrap or soldered wires.

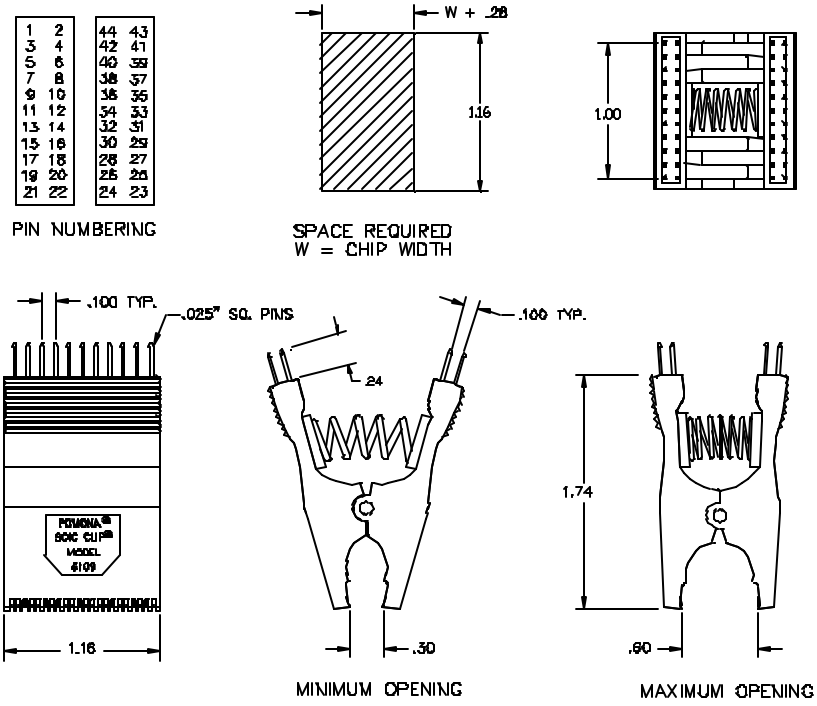

- Gold plated upper contacts fit standard double row ribbon cable connectors.
- Gold plated lower contacts assure reliable, noise free connections.
- Molded barriers between each contact allow connections to be made on live boards without accidental shorting to adjacent chip leads.
- Open back of clip allows probing of chip leads while the clip is attached.
- Fits all 44 pin surface mounted SOIC & SOJ chips from .30" (7,62) to .60" (15,24) wide. (This clip will also work on 42 pin SOIC & SOJ chips.)
- Compact design requires a minimum of board space. Clips can be placed on chips that are spaced only .040" (1,02) apart, end-to-end. The clip requires .14" (3,56) beyond each side of the chip for placement.

All dimensions are in inches. Tolerances (except noted): .xx = ±.02” (,51 mm), .xxx = ± .005” (,127 mm).
All specifications are to the latest revisions. Specifications are subject to change without notice.
Registered trademarks are the property of their respective companies. Made in USA

Sales: 800-490-2361 Fax: 888-403-3360
Technical Assistance: 800-241-2060

Pomona*ACCESS* **90320** (800) 444-6785 or (425) 446-6010
More drawings available at www.pomonaelectronics.com