IEC Appliance Inlet C14, Screw-on Mounting, Front or Rear Side, Solder or Quick-connect Terminal



6100 with sealing to appliance



6100-3



6100-3 with sealing kit IP 54

C14

70° C

See below:
Approvals and Compliances

Description

- Panel Mount :
  Screw-on mounting from front or rear-side
- Appliance Inlet , Pin temperature 70 °C , Protection class I
- Variants with factory mounted inlet gasket and sealing kit for IP 54 into the equipement and the pluggable power supply
- Solder terminals or quick connect terminals

Other versions on request

- Types for rivet mounting available upon request
- Types for enhanced glow wire test requirements acc. IEC 60695-2-12 and -13 for the use in unattended household equipment acc. IEC 60335-1

References

Alternative: protection class II version 6102-3
Alternative: version with line filter 5110; 5120

Weblinks

pdf datasheet, html-datasheet, General Product Information, Distributor-Stock-Check, Accessories, Detailed request for product

Technical Data

Ratings IEC	10 A / 250 VAC; 50 Hz
Ratings UL/CSA	15 A / 250 VAC; 60 Hz
Dielectric Strength	> 2 kVAC between L-N > 2 kVAC between L/N-PE (1 min/50 Hz)
Allowable Operation Temperature	-25 °C to 70 °C
IP-Protection	from front side IP 40 or IP 54 with sealing kit acc. to IEC 60529
Insulation cover	Suitable for appliances with protection class I acc. to IEC 61140
Terminal	Solder terminals or quick connect terminals
Panel Thickness S	Screw: max 8 mm Mounting screw torque max 0.5 Nm
Material: Housing	Thermoplastic, black, UL 94V-0

appliance inlet/-outlet	C14 acc. to IEC 60320-1, UL 60320-1, CSA C22.2 no. 60320-1 (for cold conditions) pin-temperature 70 °C, 10 A, Protection Class I

Approvals and Compliances

Detailed information on product approvals, code requirements, usage instructions and detailed test conditions can be looked up in Details about Approvals

Approvals

The approval mark is used by the testing authorities to certify compliance with the safety requirements placed on electronic products.

Approval Reference Type: 6100-3

Approval Logo	Certificates	Certification Body	Description
	VDE Approvals	VDE	Certificate Number: 40015595
	UL Approvals	UL	UL File Number: E96454
	CQC Approvals	CQC	CCC Certificate Number:

Product standards

Product standards that are referenced

Organization	Design	Standard	Description
IEC	Designed according to	IEC 60320-1	Appliance couplers for household and similar general purposes
UL	Designed according to	UL 60320-1	Standard for Attachment Plugs and Receptacles
CSA Group	Designed according to	CSA C22.2 no. 60320-1	General Use Receptacles, Attachment Plugs, and Similar Wiring Devices

Application standards

Application standards where the product can be used

Organization	Design	Standard	Description
IEC	Designed for applications acc.	IEC/UL 60950	IEC 60950-1 includes the basic requirements for the safety of information technologyequipment.
IEC	Designed for applications acc.	IEC 60335-1	Safety of electrical appliances for household and similar purposes. Meets the requirements for appliances in unattended use. This includes the enhanced requirements of glow wire tests acc. to IEC 60695-2-12 and -13.

Compliances

The product complies with following Guide Lines

Identification	Details	Initiator	Description
CE	CE declaration of conformity	SCHURTER AG	The CE marking declares that the product complies with the applicable requirements laid down in the harmonisation of Community legislation on its affixing in accordance with EU Regulation 765/2008.
RoHS	RoHS	SCHURTER AG	EU Directive RoHS 2011/65/EU
China RoHS	China RoHS	SCHURTER AG	The law SJ / T 11363-2006 (China RoHS) has been in force since 1 March 2007. It is similar to the EU directive RoHS.
REACH	REACH	SCHURTER AG	On 1 June 2007, Regulation (EC) No 1907/2006 on the Registration, Evaluation, Authorization and Restriction of Chemicals 1 (abbreviated as "REACH") entered into force.
White paperGlow wire test	White paperGlow wire test	SCHURTER AG	Meets the requirements of IEC 60335-1 for appliances in unattended use. This includes the enhanced requirements of glow wire tests acc. to IEC 60695-2-12 and -13.

Dimensions [mm]

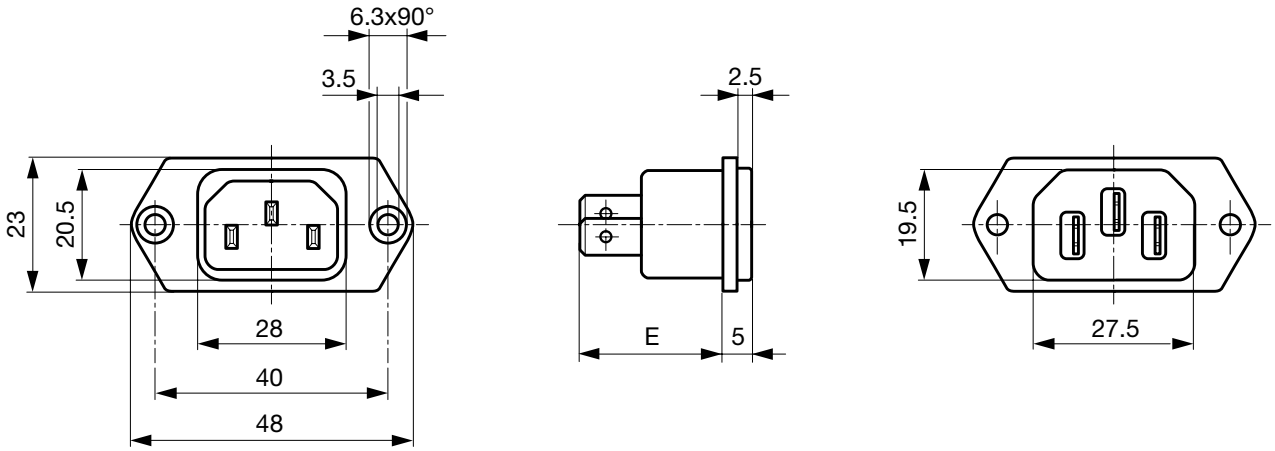

E: Solder terminals 20.5 mm
E: Quick connect terminals 23.5 mm

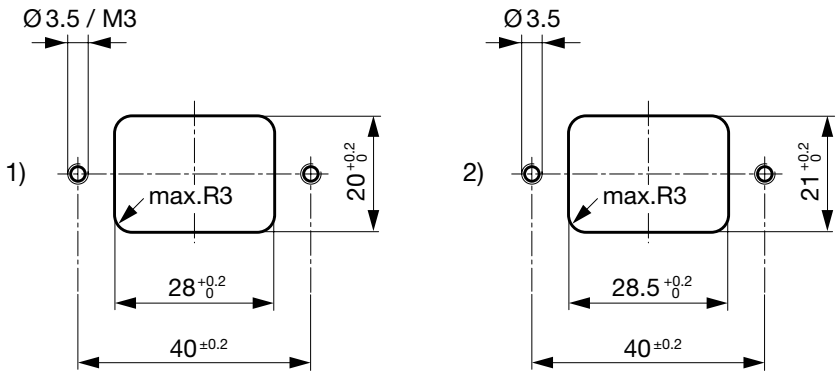

1) mounting from front-side
2) mounting from rear-side

Assembly Instructions

6100-3 incl. sealing kit for IP 54

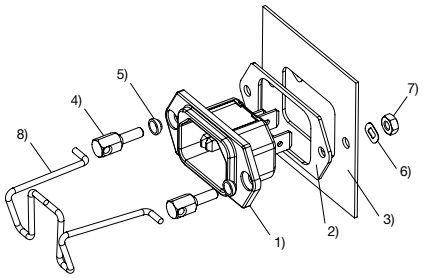

1) Appliance inlet 6100-3 with factory-mounted inlet gasket
2) Flat gasket
3) Chassis
4) Pillar
5) Gasket ring
6) Crinkle washer
7) Nut
8) Retaining clip

Mating cordsets to sealing kit

Part no	Country plug	Cable length	Cross section	Color
6000.0214	open end	2.0 m	3x1 mm2	black
6003.0215	EURO plug	2.5 m	3x1 mm2	black
6004.0215	EURO plug	2.5 m	3x1 mm2	black
6007.0212	EURO plug	1.0 m	3x1 mm2	black
6007.0214	IEC plug	2.0 m	3x1 mm2	black
6004.0114	EURO plug	2.0 m	3x0.75 mm2	black
6026.0215	Italy	2.5 m	3x1 mm2	black
6009.1315	North America	2.5 m	3x18 AWG	black
6047.6414	Japan	2.0 m	3x0.75 mm2	black
6009.1214	North America	2.0 m	3x18 AWG	black
6011.0215	Switzerland	2.5 m	3x1 mm2	black
6044.0215	United Kingdom	2.5 m	3x1 mm2	black

All Variants

Type	Protection Class	Panel mounting	Panel Thickness s [mm]	Terminal	IP Protection Class Front Side	Order Number	
6100-3	I	Screw	-	Quick connect terminals 4.8 x 0.8 mm	IP 40	6100.3200	▮
6100-3	I	Screw	-	Quick connect terminals 4.8 x 0.8 mm	IP 54	6100.3200.33	
6100-3	I	Screw	-	Quick connect terminals 6.3 x 0.8 mm	IP 40	6100.3300	▮
6100-3	I	Screw	-	Quick connect terminals 6.3 x 0.8 mm	IP 54	6100.3300.33	▮
6100-3	I	Screw	-	Solder terminals 3.5 x 0.8 mm	IP 40	6100.3100	▮
6100-3	I	Screw	-	Solder terminals 3.5 x 0.8 mm	IP 54	6100.3100.33	

▮ Most Popular.

Availability for all products can be searched real-time:https://www.schurter.com/en/Stock-Check/Stock-Check-SCHURTER

The variants IP54 (6100.xxxx.33) include the inlet with factory mounted inlet gasket and the kit for IP protection to the equipment and for the power connector incl. a cord retaining for a specific cord connector. Samples can be ordered with suffix ".H" (e.g. 6100.3100.33.H).

Articles for enhanced glow wire test requirements acc. IEC 60695-2-12 and -13 can be ordered with ending ".15" (xxxx.xxxx.15). They are suitable for the use in unattended household equipment acc. IEC 60335-1.

Packaging unit 50 Pcs

Accessories

	Description	
	Wire Harness Wire harness for SCHURTER products	
	Assorted Covers Rear Cover	
		0859.0048
		4311.9401
		4311.9402
	Cord retaining kits Cord retaining strain relief	
	Flat head, A	4700.0001

Mating Outlets/Connectors

	Category / Description	
	Appliance Outlet Overview complete	
	IEC Appliance Outlet F, Screw-on Mounting, Front Side, Solder Terminal	4787
	IEC Appliance Outlet F, Snap-in Mounting, Front Side, Solder or Quick-connect Terminal	4788
	IEC Appliance Outlet F or H, Screw-on Mounting, Front Side, Solder, PCB or Quick-connect Terminal	5091
	Appliance Outlet further types to 6100-3	
	Connector Overview complete	
	4782 Mounting: Power Cord, 3 x 1 mm² / 3 x 18 AWG, Cable, Connector: IEC C13	4782
	4022 Mounting: Power Supply Cord, 3 x 1.5 mm², Screw clamps, Connector: IEC C13	4022
	4785 Mounting: Power Cord, 3 x 1 mm² / 3 x 18 AWG, Cable, Connector: IEC C13	4785
	4300-06 Mounting: Power Cord, 3 x 1 mm² / 3 x 18 AWG, Cable, Connector: IEC C13	4300-06
	4012 Mounting: Power Supply Cord, 3 x 1.5 mm², Screw clamps, Connector: IEC C13	4012
	Connector further types to 6100-3	...

27.02.2018

The specifications, descriptions and illustrations indicated in this document are based on current information. All content is subject to modifications and amendments. Information furnished is believed to be accurate and reliable. However, users should independently evaluate the suitability and test each product selected for their own applications.