Technical Data Sheet		Rosenberger
7-16	Airline Plug / Jack	**60S101-K066**

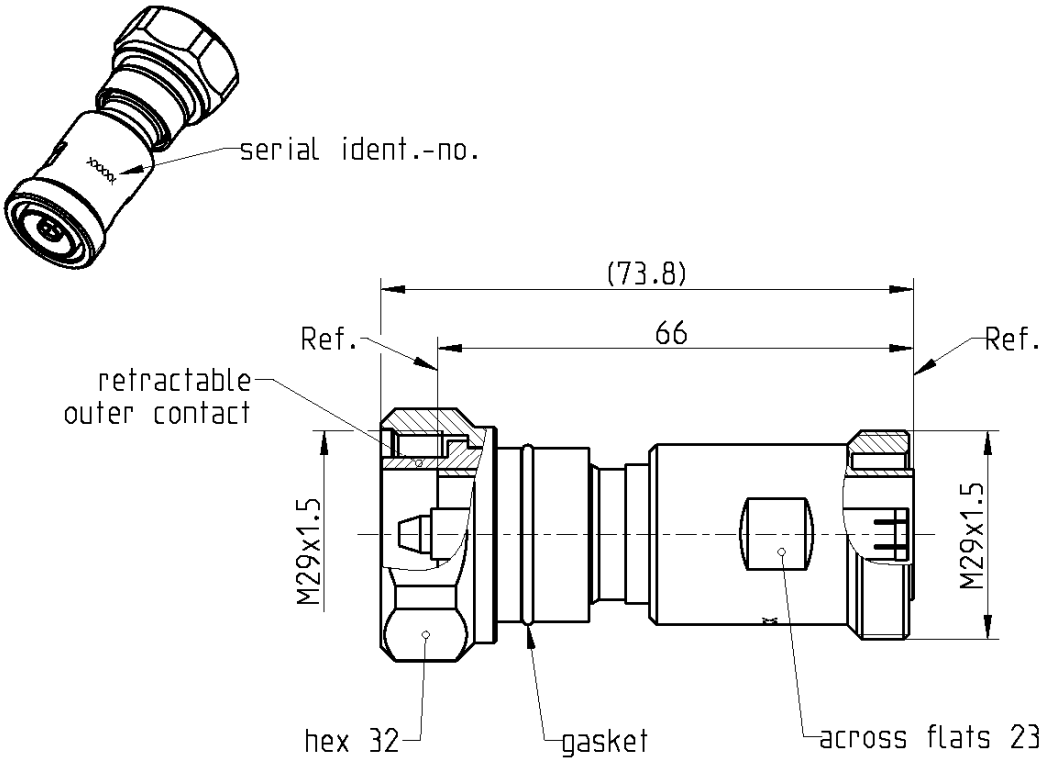

All dimensions are in mm; tolerances according to ISO 2768 m-H

Interface

According to	IEC 61169-4, EN 122190, DIN 47223

Documents

Application note	AN001 “Calibration Services”

Material and plating

Connector parts	**Material**	**Plating**
Center conductor plug side	Brass	Gold, min. 1.27 µm, over nickel
Center conductor plug side	CuBe	Gold, min. 1.27 µm, over nickel
Outer conductor	Brass	Gold, min. 1.27 µm, over nickel
Coupling nut	Stainless steel	Passivated
Gasket	NBR	

Dieses Dokument ist urheberrechtlich geschützt ● This document is protected by copyright ● Rosenberger Hochfrequenztechnik GmbH & Co. KG

Rosenberger Hochfrequenztechnik GmbH & Co. KG
P.O.Box 1260 D-84526 Tittmoning Germany
www.rosenberger.de

Tel. : +49 8684 18-0
Email : info@rosenberger.de

Electrical data

Insertion loss	≤ 0.06 dB at 8 GHz

Mechanical data

Mating cycles	≥ 500
Maximum torque	35 Nm
Recommended torque	2.26 Nm
Airline dimensions at 23 °C:	
- Diameter outer conductor	16.060 mm ± 0.010 mm
- Diameter inner conductor	6.975 mm ± 0.005 mm
- Length outer conductor	66.00 mm + 0.02 mm
- Length inner conductor	65.98 mm - 0.02 mm
- Length difference (outer conductor – inner conductor)	≤ 0.06 mm

Calculated data (non warranted)

Lossless characteristic impedance[1]	50 Ω ± 0.10 Ω
Return loss[2]	≥ 45 dB, 0.2 GHz to 4 GHz ≥ 40 dB, 4 GHz to 8 GHz

1. *The lossless characteristic impedance is calculated from the specified diameters of the inner and outer conductor.*
2. *The return loss is calculated from the characteristic impedance, the skin depth and the connector interface.*

General standard definitions

For proper work the vector network analyzer (VNA) used needs a model describing the electrical behaviour of this calibration standard. Depending on the VNA type different models, units and terms are used and have to be entered into the VNA. All values are based on typical geometry and plating.

- Offset Z_o / Impedance / Z_o	50 Ω
- Offset Delay	220.257 ps
- Length (electrical) / Offset Length	66.031 mm
- Offset Loss	0.70 GΩ/s
- Loss	0.0134 dB/$\sqrt{\text{GHz}}$

Environmental data

Operating temperature range[3]	+20 °C to +26 °C
Storage temperature range	0 °C to +50 °C
RoHS	compliant

3. *This range is a recommendation. However, the airline can be used in a wider range. Any temperature change from 23 °C results in dimensional changes.*

Dieses Dokument ist urheberrechtlich geschützt ● This document is protected by copyright ● Rosenberger Hochfrequenztechnik GmbH & Co. KG

Rosenberger Hochfrequenztechnik GmbH & Co. KG
P.O.Box 1260 D-84526 Tittmoning Germany
www.rosenberger.de

Tel. : +49 8684 18-0
Email : info@rosenberger.de

Declaration of calibration options

Factory Calibration

Standard delivery for this calibration standard includes a Factory Calibration. The Calibration Certificate issued reports individual mechanical calibration results, traceable to national / international standards. Model based standard definitions are reported in an Agilent/Keysight, Rohde & Schwarz and Anritsu compatible VNA format.

Accredited Calibration

Not available.

For further, more detailed information see application note AN001 on the Rosenberger homepage.

Calibration interval

Recommendation	12 months

Packing

Standard	1 pce in box
Weight	187.2 g/pce
Center conductor	loose in an acrylic glass tube

While the information has been carefully compiled to the best of our knowledge, nothing is intended as representation or warranty on our part and no statement herein shall be construed as recommendation to infringe existing patents. In the effort to improve our products, we reserve the right to make changes judged to be necessary.

Dieses Dokument ist urheberrechtlich geschützt ● This document is protected by copyright ● Rosenberger Hochfrequenztechnik GmbH & Co. KG

Rosenberger Hochfrequenztechnik GmbH & Co. KG
P.O.Box 1260 D-84526 Tittmoning Germany
www.rosenberger.de

Tel. : +49 8684 18-0
Email : info@rosenberger.de