Ø 13,78” x 6,97” Ø 350 x 177 mm

Series 60A

ETRI®

AC High Performance Fans

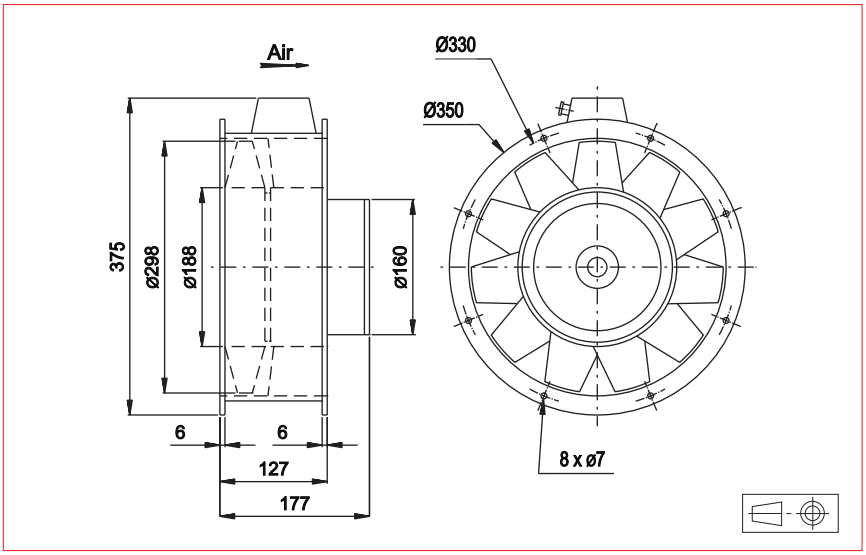



Approvals

CE , NATO codification

AC Motor
Housing material:
Impeller material:
Weight: 13 kg
Bearing system: ball bearings

Available with:
- Safety switch

Life expectancy

L-10 LIFE AT 40°C:
25 000 hours

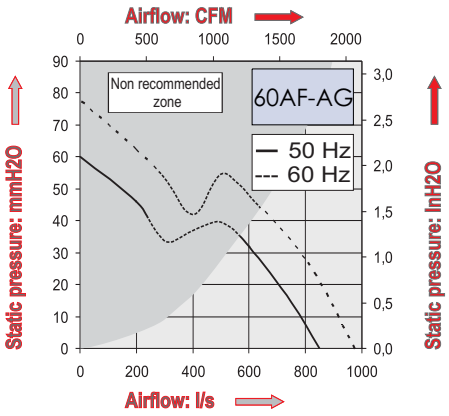

Part Number	Nominal voltage	Airflow	Noise level	Nominal speed	Frequency	Phases	Capacitor (not included)	Input power	Nominal Current	Starting Current	Connection type		Operating temperature	
	V	l/s	dB(A)	RPM	Hz		µF	W	mA	mA	Leads	Terminals	Min.°C	Max.°C
60AF026DC13	220	850	82	2900	50	3		385	1700	14000		X	-10	70
	380	850	82	2900	50	3		385	1000	8100		X	-10	70
	220	975	86	3350	60	3		555	1800	12200		X	-10	70
	380	975	86	3350	60	3		555	1050	7100		X	-10	70
60AG0266C13	127	850	82	2900	50	1		445	4450	25000		X	-10	70
	127	975	86	3350	60	1		580	4700	14500		X	-10	70
60AG0261C13	220	850	82	2900	50	1		445	2550	14500		X	-10	70
	220	975	86	3350	60	1		580	2700	13000		X	-10	70

Additional versions:
Salt spray protected - Shock and vibration protected - Marine specifications
Wide temperature range - Other voltages (consult factory)

Non contractual document. Specifications are subject to change without prior notice. Pictures for information only. Edition 2016