THIS DRAWING IS UNPUBLISHED. RELEASED FOR PUBLICATION –,– .
© COPYRIGHT – By – ALL RIGHTS RESERVED.

LOC	DIST
AF	50

REVISIONS

P	LTR	DESCRIPTION	DATE	DWN	APVD
	J	REVISED PER ECR–12–013459	28NOV2012	KH	PD

1 CONTINUOUS STRIP ON REELS.

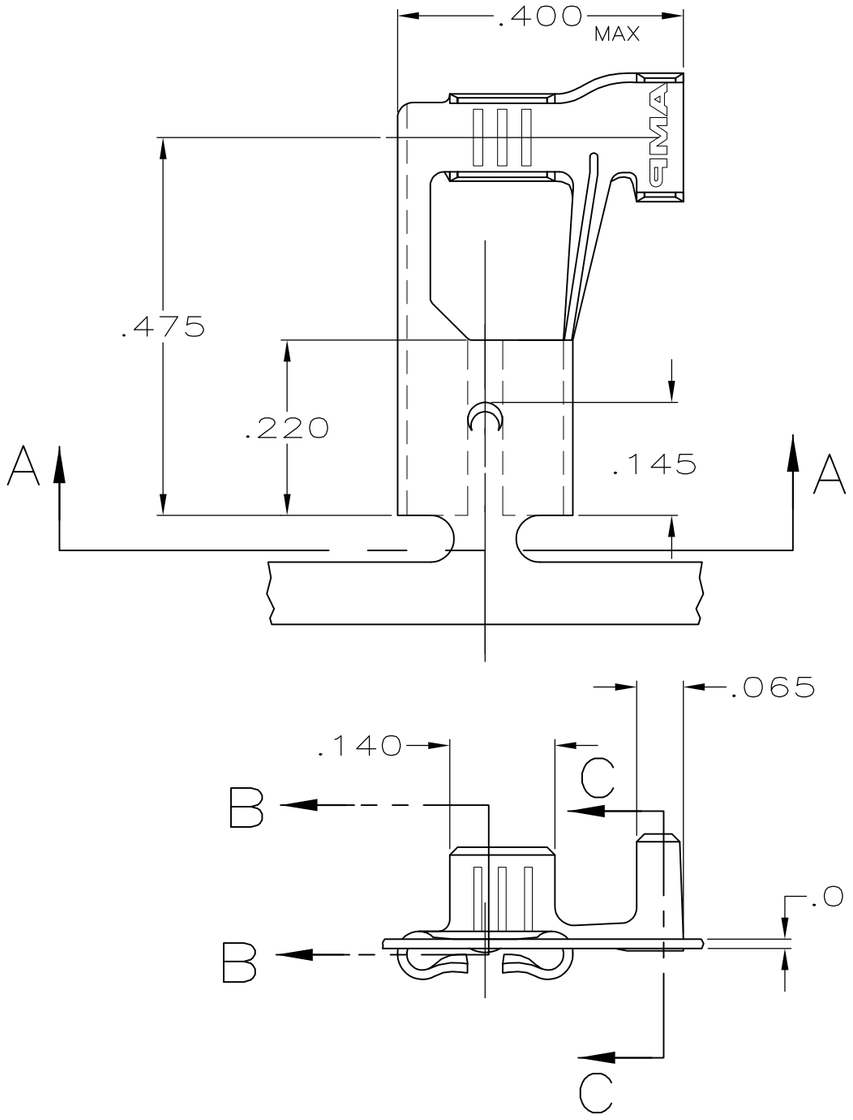

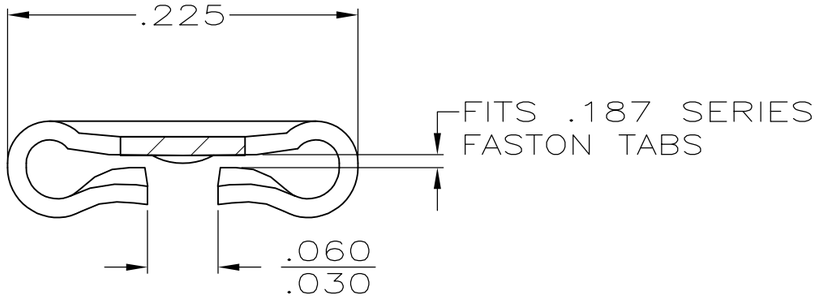

SECTION A–A
SCALE 10:1

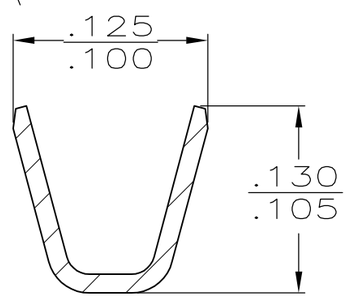

SECTION B–B
SCALE 10:1

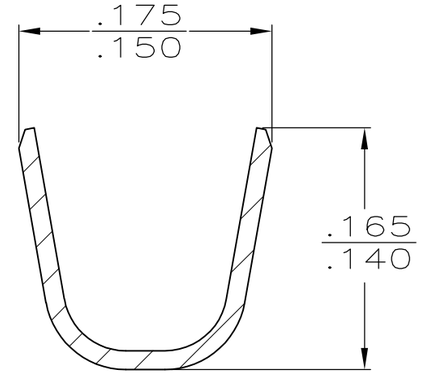

SECTION C–C
SCALE 10:1

.090–.130 DIA	20–16 AWG	TIN	.020	60755–2
		–		60755–1
INSULATION RANGE	WIRE SIZE	FINISH	MATING TAB THK #.001	PART NUMBER

THIS DRAWING IS A CONTROLLED DOCUMENT.

DIMENSIONS: INCHES

TOLERANCES UNLESS OTHERWISE SPECIFIED:

0 PLC	± –
1 PLC	± –
2 PLC	± –
3 PLC	± .015
4 PLC	± –
ANGLES	± –

MATERIAL: BRASS

FINISH: SEE TABLE

DWN	JR RUTH	11/5/91
CHK	MS FEHER	11/5/91
APVD	C MEYERS	11/5/91
PRODUCT SPEC	–	
APPLICATION SPEC	–	
WEIGHT	–	

CUSTOMER DRAWING

TE Connectivity

NAME: RECEPTACLE, FASTON, FLAG, .187 SERIES

SIZE	CAGE CODE	DRAWING NO	RESTRICTED TO
A3	00779	C-60755	–

SCALE	SHEET	REV
5:1	1 OF 1	J