IEC Appliance Inlet C18, Screw-on Mounting, Front Side, Solder or Quick-connect, PCB or Screw Terminal



C18

70° C

Description

- Panel Mount:
  Screw-on mounting, Frontside
- 1 Function:

- Appliance Inlet, Pin temperature 70 °C, Protection class II
- Solder, quick-connect, screw, PCB

Approvals

- VDE Certificate Number: 40011871
- UL File Number: E96454
- CSA File Number: 27324

References

This type is Phase-out without alternate type
Last order date: 31.12.2012

Weblinks

pdf-datasheet, html-datasheet, General Product Information, Approvals, RoHS, CHINA-RoHS, Mating Connectors, e-Shop, SCHURTER-Stock-Check, Distributor-Stock-Check, CAD-Drawings, Accessories, Detailed request for product

Technical Data

Ratings IEC	10 A / 250 VAC; 50 Hz
Ratings UL/CSA	15 A / 250 VAC; 60 Hz
Dielectric Strength	> 3 kVAC between L-N > 1.5 kVAC between L/N-PE (1 min/50 Hz)
Allowable Operation Temp.	-25 °C to 70 °C
Degree of Protection	from front side IP 20 acc. to IEC 60529
Protection Class	Suitable for appliances with protection class II acc. to IEC 61140
Material: Housing	PA6, black or grey, UL 94V-0

Appliance Inlet	C18 acc. to IEC 60320 UL 498, CSA C22.2 no. 42 (for cold conditions) pin-temperature 70 °C, 10 A, Protection Class II

Dimensions

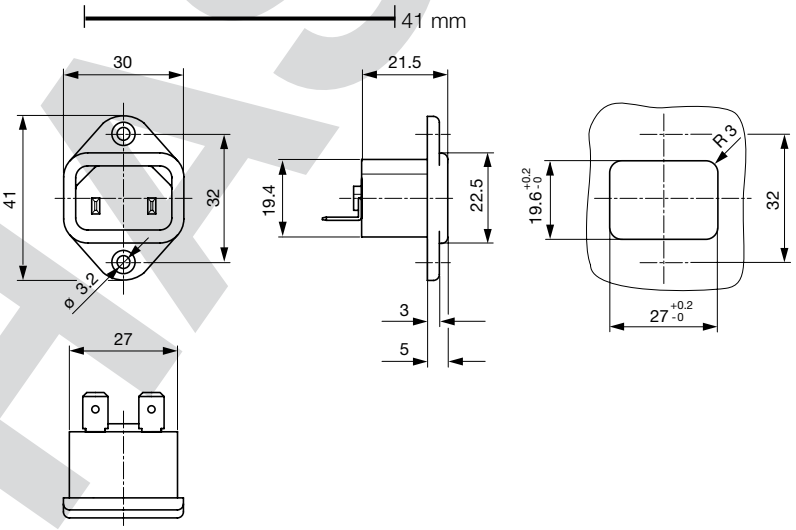

Length of the terminal please find at the order code configuration table
Ansicht von unten

PHASE-OUT

Config. Code

6066 - H - A B C 0- D - E

The characters are placeholders for the correspondingly keys of selections from the key tables.

6066 - **H** - A B C 0- D - E = Type

Type	Configuration key
protection class 2	B

6066 - H - **A** B C 0- D - E = Terminals

Terminal L		Configuration key
short solder terminal (L = 4.8 mm)		2
long solder terminal (L = 8.5 mm)		3
Blade terminal (4.8 x 0.8 mm)		8
Blade terminal (6.3 x 0.8 mm)		9
screw terminal		A

6066 - H - A **B** C 0- D - E = Terminals

Terminal N	Configuration key
short solder terminal (L = 4.8 mm)	2
long solder terminal (L = 8.5 mm)	3
Blade terminal (4.8 x 0.8 mm)	8
Blade terminal (6.3 x 0.8 mm)	9
screw terminal	A

Symbols similar as in table A

6066 - H - A B **C** 0- D - E = Terminals

Terminal Ground	Configuration key
without terminal	0

Symbols similar as in table A

6066 - H - A B C 0- **D** - E = Color

Color	Configuration key
Black	A
Grey	B

6066 - H - A B C 0- D - **E** = Style

Style	Configuration key
flange with countersunk holes	1

Variants

Config. Code	Description	Order Number
6066-X-2200-A-1	6066, IEC Appliance Inlet C18, 70°C, version: 2, L: short solder terminal (L = 4.8 mm), N: short solder terminal (L = 4.8 mm), ground: without terminal, color: Black, design: flange with countersunk holes, dimension X: , features:	6162.0075

The listet variants should be available from stock Other versions on request www.schurter.com/contact

Packaging unit

50 Pcs

Accessories

	Description
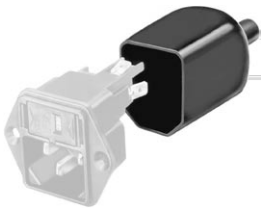	Assorted Covers Rear Cover

Mating Outlets/Connectors







Category / Description	
Connector Overview complete	
IEC Connector C15, Rewireable, Straight	0101
IEC Connector C15A, Rewireable, Straight	0102
IEC Connector C15A, Rewireable, Straight	0102-G
IEC Connector C15A, Rewireable, Angled	0112
IEC Connector C13, Rewireable, Angled	4012
Connector further types to 6066	...
Power Cord Overview complete	
Power Cord with IEC Connector C17, Angled	0301
Power Cord with IEC Connector C13, Angled	0311
Power Cord with IEC Connector C13, Angled	3011
Power Cord with IEC Connector C13, Angled	3012
Power Cord with IEC Connector C13, Angled	3013
Power Cord further types to 6066	...
Power Supply or Interconnection Cord Overview complete	
Diverse Power Supply and Interconnection Cords 10 A	Cord Sets 10 A
Power Supply or Interconnection Cord further types to 6066	

PHASE

28.02.2013

The specifications, descriptions and illustrations indicated in this document are based on current information. All content is subject to modifications and amendments.