Online data sheet



PBS-CB2X5SF2FSNBMA0Z

PBS

PRESSURE SENSORS

SICK
Sensor Intelligence.



Illustration may differ

Ordering information

Type	Part no.
PBS-CB2X5SF2FSNBMA0Z	6051341

Other models and accessories → www.sick.com/PBS

Detailed technical data

Features

Medium	Liquid, gaseous
Pressure type	Compound pressure
Measuring range	–1 bar ... 1.5 bar
Process temperature	–20 °C ... +85 °C
Zero point adjustment	Max. + 3 % of span
Output signal	1 x PNP + 4 mA ... 20 mA
Rotatable housing	
Display	

Performance

Non-linearity	≤ ± 0.5 %, of span (Best Fit Straight Line, BFSL) according to IEC 61298-2
Accuracy	≤ ± 1 % of the span Including non-linearity, hysteresis, zero point and full scale error (corresponds to error of measurement as per IEC 61298-2)
Setting accuracy of switching outputs	≤ ± 0.5 % of span
Response time	3 ms
Long-term drift/one-year stability	≤ 0.2 % of the span according to IEC 61298-2
Temperature coefficient in rated temperature range	Mean TC of zero point: ≤ 0.2% of span / 10 K, Mean TC of span ≤ 0.2 % of span / 10 K
Rated temperature range	0 °C ... +80 °C
Service life	Minimum 100 Mio. life cycles

Mechanics/electronics

Process connection	G ½ B flush mounted
Wetted parts	Pressure connection: stainless steel 316L Pressure sensor: stainless steel 316L (for measurement ranges from 0 bar ... 10 bar rel stainless steel 13-8 PH)
Internal transmission fluid	Silicone oil (only with pressure ranges < 0 bar ... 10 bar and ≤ 0 bar abs ... 25 bar abs)
Pressure port	Front-flush membrane

Housing material	Lower body: stainless steel 304, Plastic head: PC + ABS, Buttons: TPE-E, Display window: PC
Electrical connection	Round connector M12 x 1, 4-pin, IP 67
Supply voltage	
Power consumption	
Total current consumption	Max. 350 mA / 570 mA (incl. switching current)
Electrical safety	
Insolation voltage	500 V DC
CE-conformity	Pressure equipment directive: This instrument is a pressure accessory as defined by the directive 97/23/EC, EMC directive: 2004/108/EC, EN 61326-2-3
Weight sensor	Approx. 200 g
Seal	NBR
Enclosure rating	IP 67
Protection class III	✓

Ambient data

Ambient temperature	–20 °C ... +80 °C
Storage temperature	–20 °C ... +80 °C
Relative humidity	≤ 90 %
Shock load	
Vibration load	

Classifications

ECl@ss 5.0	27371814
ECl@ss 5.1.4	27371814
ECl@ss 6.0	27371814
ECl@ss 6.2	27371814
ECl@ss 7.0	27371814
ECl@ss 8.0	27371814
ECl@ss 8.1	27371814
ECl@ss 9.0	27371814
ETIM 5.0	EC000243
ETIM 6.0	EC000243
UNSPSC 16.0901	41112409

Dimensional drawing (Dimensions in mm (inch))

G ½ B flush mounted

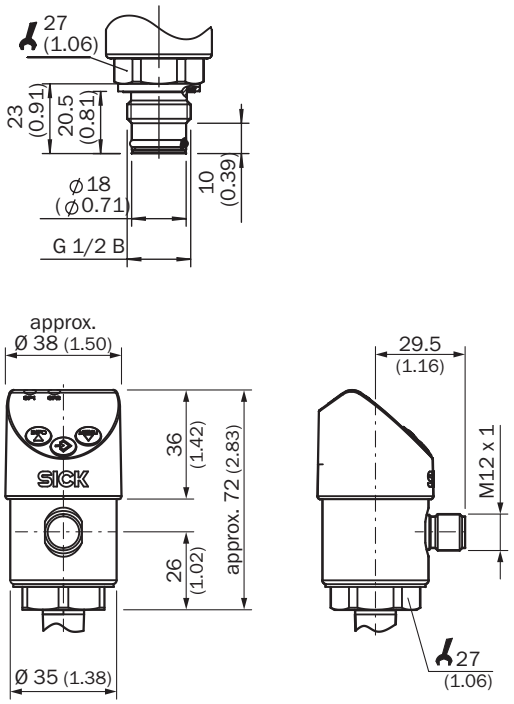

Connection type

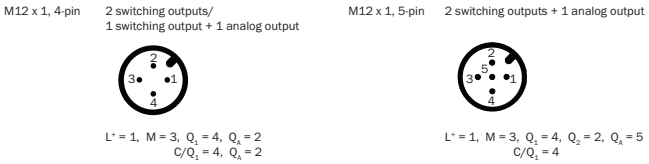

① L^+: Positive supply connection
② M: Negative supply connection
③ Q_1: Switching output 1
④ C/Q_1: With IO-Link: Communication/ switching output 1
⑤ Q_2: Switching output 2
⑥ Q_A: Analog output

Recommended accessories

Other models and accessories ➜ www.sick.com/PBS

	Brief description	Type	Part no.
Mounting brackets and mounting plates			
	Mounting bracket for simple and stable wall mounting of pressure sensors with 27 mm hexagon, Aluminum	BEF-FL-ALUPBS-HLDR	5322501

	Brief description	Type	Part no.
Plug connectors and cables			
	Head A: female connector, M12, 4-pin, straight Head B: cable Cable: PVC, unshielded, 2 m	DOL-1204-G02M	6009382
	Head A: female connector, M12, 4-pin, straight Head B: cable Cable: drag chain use, PUR, halogen-free, unshielded, 2 m	DOL-1204-G02MC	6025900
	Head A: female connector, M12, 4-pin, straight Head B: cable Cable: PVC, unshielded, 5 m	DOL-1204-G05M	6009866
	Head A: female connector, M12, 4-pin, straight Head B: cable Cable: drag chain use, PUR, halogen-free, unshielded, 5 m	DOL-1204-G05MC	6025901
	Head A: female connector, M12, 4-pin, straight Head B: cable Cable: PVC, unshielded, 10 m	DOL-1204-G10M	6010543
	Head A: female connector, M12, 4-pin, straight Head B: cable Cable: drag chain use, PUR, halogen-free, unshielded, 10 m	DOL-1204-G10MC	6025902
	Head A: female connector, M12, 4-pin, straight Head B: cable Cable: PVC, unshielded, 15 m	DOL-1204-G15M	6010753
	Head A: female connector, M12, 4-pin, straight Head B: cable Cable: PVC, unshielded, 20 m	DOL-1204-G20M	6034401
	Head A: female connector, M12, 4-pin, angled Head B: cable Cable: PVC, unshielded, 2 m	DOL-1204-W02M	6009383
	Head A: female connector, M12, 4-pin, angled Head B: cable Cable: drag chain use, PUR, halogen-free, unshielded, 2 m	DOL-1204-W02MC	6025903
	Head A: female connector, M12, 4-pin, angled Head B: cable Cable: PVC, unshielded, 5 m	DOL-1204-W05M	6009867
	Head A: female connector, M12, 4-pin, angled Head B: cable Cable: drag chain use, PUR, halogen-free, unshielded, 5 m	DOL-1204-W05MC	6025904
	Head A: female connector, M12, 4-pin, angled Head B: cable Cable: drag chain use, Welding spark resistant, PUR, halogen-free, unshielded, 5 m	DOL-1204-W05MD	6020399
	Head A: female connector, M12, 4-pin, angled Head B: cable Cable: PVC, unshielded, 10 m	DOL-1204-W10M	6010541
	Head A: female connector, M12, 4-pin, angled Head B: cable Cable: drag chain use, PUR, halogen-free, unshielded, 10 m	DOL-1204-W10MC	6025905

	Brief description	Type	Part no.
	Head A: female connector, M12, 4-pin, angled Head B: cable Cable: PVC, unshielded, 15 m	DOL-1204-W15M	6036474
	Head A: female connector, M12, 4-pin, angled Head B: cable Cable: PVC, unshielded, 20 m	DOL-1204-W20M	6033559

SICK AT A GLANCE

SICK is one of the leading manufacturers of intelligent sensors and sensor solutions for industrial applications. A unique range of products and services creates the perfect basis for controlling processes securely and efficiently, protecting individuals from accidents and preventing damage to the environment.

We have extensive experience in a wide range of industries and understand their processes and requirements. With intelligent sensors, we can deliver exactly what our customers need. In application centers in Europe, Asia and North America, system solutions are tested and optimized in accordance with customer specifications. All this makes us a reliable supplier and development partner.

Comprehensive services complete our offering: SICK LifeTime Services provide support throughout the machine life cycle and ensure safety and productivity.

For us, that is “Sensor Intelligence.”

WORLDWIDE PRESENCE:

Contacts and other locations –www.sick.com