Online data sheet



TBS-1ASG12506NM

TBS

TEMPERATURE SENSORS

SICK
Sensor Intelligence.



Illustration may differ

Ordering information

Type	Part no.
TBS-1ASG12506NM	6048664

Other models and accessories → www.sick.com/TBS

Detailed technical data

Features

Measuring range	–20 °C ... +80 °C
Sensor element	Pt1000, 2-wire, class A according to IEC 60751
Output signals	2 x PNP
Switching output	Transistor
Switching voltage	Supply voltage [V DC] - 1 V DC
Maximum switching current	≤ 250 mA
Switching delay	0 s ... 50 s, programmable
Setting accuracy of switching outputs	+0.1 °C
Number	2
Switching voltage	Supply voltage [V DC] - 1 V DC
Maximum switching current	≤ 250 mA
Switching delay	0 s ... 50 s, programmable
Setting accuracy of switching outputs	+0.1 °C
Temperature offset	± +3 °C
Scaling of measuring range	Zero point: max. +25 % of span Full scale: max. –25 % of span Max. +25 % of span, max. –25 % of span
Display	14-segment LED, blue, 4-digits, height 9 mm, Display electronically turnable by 180 °, update: 200 ms
Rotatable housing	Display against housing with electrical connection: 330 ° Housing against process connection: 320 °

Performance

Accuracy of sensor element	≤ ± (0.15 °C + 0.002 |t|) [1]
Accuracy of switching output	≤ ± 0.8 % of span
Display accuracy	≤ ± 0.8 % of span ± 1 digit
Response time t_{50}	≤ 5 s [2]
Response time t_{90}	≤ 10 s [2]

[1] |t| is the absolute value of the temperature in °C.
[2] Depending on sensor configuration, according to IEC 60751.

Mechanics/electronics

Process connection	Thread G ¼ A according to DIN 3852-E
Insertion length/diameter of probe	250 mm / 6 mm
Seal	NBR
Wetted parts	Stainless steel 1.4571 (AISI 316Ti)
Maximum process pressure	≤ 150 bar [1]
Housing material	Lower body: stainless steel 1.4301 (AISI 304) Plastic head: PC + ABS Input keypad: TPE-E Display window: PC
Enclosure rating	IP65 (according to IEC 60529) [2] IP67 (according to IEC 60529) [2]
Electrical connection	M12 round connector x 1, 4-pin
Maximum ohmic load R_A	≤ 100 kΩ (Switching outputs)
Supply voltage	15 V DC ... 35 V DC
Maximum current consumption	45 mA
Total current consumption	570 mA (incl. switching current) 320 mA
Protection class	III
Insolation voltage	500 V DC
Overvoltage protection	40 V DC
Short-circuit protection	Outputs Q_A, Q_1, Q_2 towards M
Reverse polarity protection	L^+ towards M
Electrical safety	
Protection class	III
Insolation voltage	500 V DC
Overvoltage protection	40 V DC
Short-circuit protection	Outputs Q_A, Q_1, Q_2 towards M
Reverse polarity protection	L^+ towards M
CE-conformity	2004/108/EC, EN 61326-1 emission (group 1, class B) and interference immunity (industrial application)
RoHS certificate	✓

[1] At room temperature and when connected through thread.
[2] The enclosure rating classes specified only apply while the thermometer is connected with female connectors that provide the corresponding enclosure rating.

Ambient data

Ambient temperature	–20 °C ... +80 °C
Storage and transport temperature	–20 °C ... +80 °C
Relative humidity	45 % ... 75 %

Classifications

ECl@ss 5.0	27200208
ECl@ss 5.1.4	27200208
ECl@ss 6.0	27200208
ECl@ss 6.2	27200208

ECl@ss 7.0	27200208
ECl@ss 8.0	27200208
ECl@ss 8.1	27200208
ECl@ss 9.0	27200208
ETIM 5.0	EC001446
ETIM 6.0	EC001446
UNSPSC 16.0901	41112211

Dimensional drawing (Dimensions in mm (inch))

TBS with connection G ¼ A according to DIN 3852-E

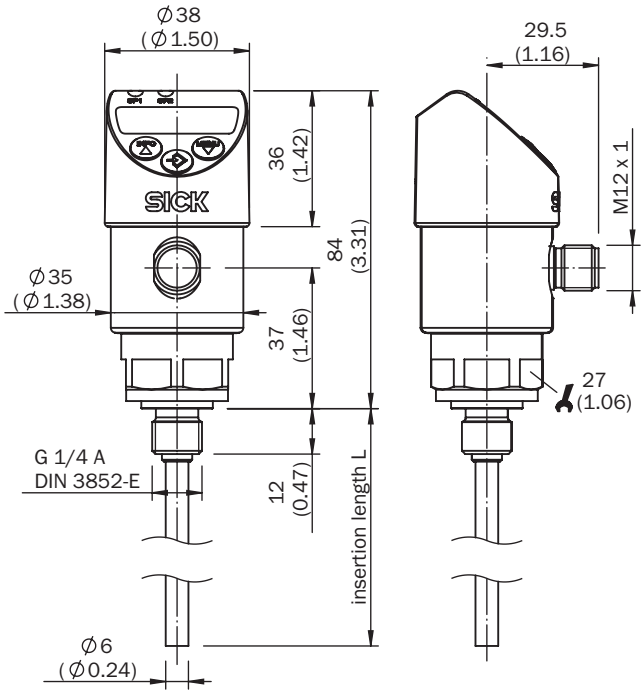

Connection type

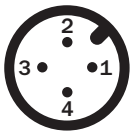

① L+
② Q_A/Q_2, type-dependent
③ M
④ Q1

Recommended accessories

Other models and accessories ➜ www.sick.com/TBS

	Brief description	Type	Part no.
Plug connectors and cables			
	Head A: female connector, M12, 4-pin, straight Head B: cable Cable: PVC, unshielded, 2 m	DOL-1204-G02M	6009382
	Head A: female connector, M12, 4-pin, straight Head B: cable Cable: drag chain use, PUR, halogen-free, unshielded, 2 m	DOL-1204-G02MC	6025900
	Head A: female connector, M12, 4-pin, straight Head B: cable Cable: PVC, unshielded, 5 m	DOL-1204-G05M	6009866
	Head A: female connector, M12, 4-pin, straight Head B: cable Cable: drag chain use, PUR, halogen-free, unshielded, 5 m	DOL-1204-G05MC	6025901

SICK AT A GLANCE

SICK is one of the leading manufacturers of intelligent sensors and sensor solutions for industrial applications. A unique range of products and services creates the perfect basis for controlling processes securely and efficiently, protecting individuals from accidents and preventing damage to the environment.

We have extensive experience in a wide range of industries and understand their processes and requirements. With intelligent sensors, we can deliver exactly what our customers need. In application centers in Europe, Asia and North America, system solutions are tested and optimized in accordance with customer specifications. All this makes us a reliable supplier and development partner.

Comprehensive services complete our offering: SICK LifeTime Services provide support throughout the machine life cycle and ensure safety and productivity.

For us, that is “Sensor Intelligence.”

WORLDWIDE PRESENCE:

Contacts and other locations –www.sick.com