Online data sheet



PBT-AB1X0AG1SSFAMA0Z

PBT

PRESSURE SENSORS

SICK
Sensor Intelligence.



Illustration may differ

Ordering information

Type	Part no.
PBT-AB1X0AG1SSFAMA0Z	6047585

Other models and accessories → www.sick.com/PBT

Detailed technical data

Features

Medium	Liquid, gaseous
Pressure type	Absolute pressure
Measuring range	0 bar ... 1 bar
Process temperature	0 °C ... +80 °C
Output signal	4 mA ... 20 mA

Performance

Non-linearity	≤ ± 0.25 %, (Best Fit Straight Line, BFSL) according to IEC 61298-2
Accuracy	≤ ± 0.5 % of the span (with non-linearity 0.25 %) ≤ ± 0,6 % of Span (with non-linearity 0.25 % and with signal output 0 ... 5 V) ≤ ± 1,0 % of Span (with non-linearity 0.5 %) Including non-linearity, hysteresis, zero point and full scale error (corresponds to error of measurement as per IEC 61298-2)
Adjustment accuracy of zero signal	≤ 0.15 % of span typ., ≤ 0.4 % of span max. (with non-linearity 0.25 %)
Hysteresis	≤ 0.16 % of the span
Non-repeatability	≤ 0.1 % of the span
Response time	< 4 ms
Signal noise	≤ 0.3 % of the span
Long-term drift/one-year stability	≤ 0.1 % of span to IEC 61298-2
Rated temperature range	0 °C ... +80 °C
Service life	Minimum 100 Mio. life cycles

Mechanics/electronics

Process connection	G ¼ A according to DIN 3852-E
Wetted parts	Pressure Connection: stainless steel 316L Pressure sensor: stainless steel 316L (for measurement ranges from 0 bar ... 10 bar rel stainless steel 13-8 PH)
Internal transmission fluid	Silicone oil (only with pressure ranges < 0 bar ... 10 bar and ≤ 0 bar abs ... 25 bar abs)
Pressure port	Standard
Housing material	Stainless steel 316L

[1] The pressure transmitter must be supplied with power by a limited energy circuit compliant with 9.3 of UL/EN/IEC 601010-1 or LPS to UL/EN/IEC 60950-1 or Class 2 to UL 1310/UL1585 (NEC or CEC). The power supply must be suitable for operation above 2,000 m if the pressure transmitter is used above this altitude.

Electrical connection	Round connector M12 x 1, 4-pin, IP 67
Supply voltage	
Power consumption	
Electrical safety	
Insolation voltage	500 V DC
CE-conformity	Pressure equipment directive: 97/23/EC, EMC directive: 2004/108/EC, EN 61 326-2-3
Weight sensor	Approx. 80 g
Seal	FPM/FKM
Enclosure rating	IP 67
Protection class III	✓
Reference conditions	Reference conditions: According to IEC 61298-1

[1] The pressure transmitter must be supplied with power by a limited energy circuit compliant with 9.3 of UL/EN/IEC 601010-1 or LPS to UL/EN/IEC 60950-1 or Class 2 to UL 1310/UL1585 (NEC or CEC). The power supply must be suitable for operation above 2,000 m if the pressure transmitter is used above this altitude.

Ambient data

Ambient temperature	0 °C ... +80 °C
Storage temperature	–20 °C ... +80 °C
Relative humidity	45 % ... 75 %
Shock load	
Vibration load	

Classifications

ECl@ss 5.0	27200614
ECl@ss 5.1.4	27200614
ECl@ss 6.0	27200614
ECl@ss 6.2	27200614
ECl@ss 7.0	27200614
ECl@ss 8.0	27200614
ECl@ss 8.1	27200614
ECl@ss 9.0	27200614
ETIM 5.0	EC002476
ETIM 6.0	EC002476
UNSPSC 16.0901	41112410

Dimensional drawing (Dimensions in mm (inch))

Housing with circular connector M12 x 1, IP 67

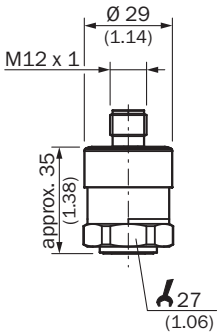

G ¼ A DIN 3852-E

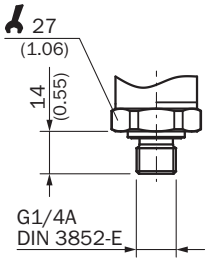

Connection type

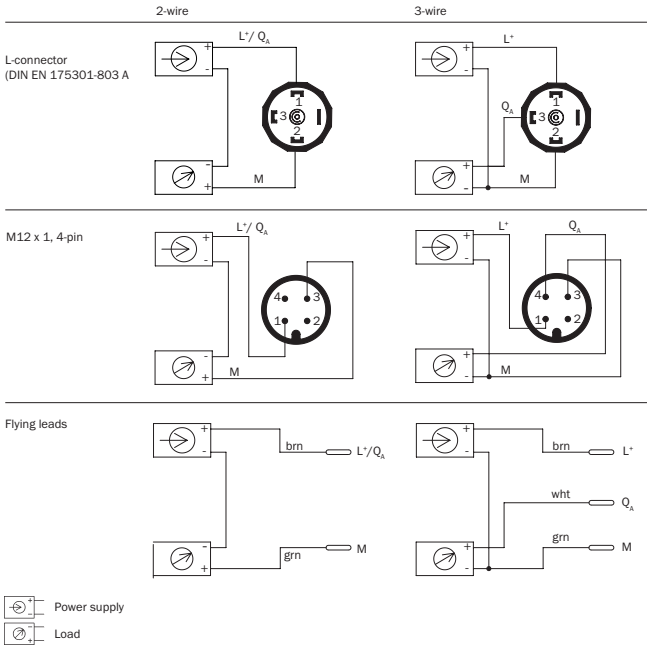

Recommended accessories

Other models and accessories ➜ www.sick.com/PBT

	Brief description	Type	Part no.
Mounting brackets and mounting plates			
	Mounting bracket for simple and stable wall mounting of pressure sensors with 27 mm hexagon, Aluminum	BEF-FL-ALUPBS-HLDR	5322501
Plug connectors and cables			
	Head A: female connector, M12, 4-pin, straight Head B: cable Cable: PVC, unshielded, 2 m	DOL-1204-G02M	6009382
	Head A: female connector, M12, 4-pin, straight Head B: cable Cable: drag chain use, PUR, halogen-free, unshielded, 2 m	DOL-1204-G02MC	6025900
	Head A: female connector, M12, 4-pin, straight Head B: cable Cable: PVC, unshielded, 5 m	DOL-1204-G05M	6009866
	Head A: female connector, M12, 4-pin, straight Head B: cable Cable: PVC, unshielded, 10 m	DOL-1204-G10M	6010543
	Head A: female connector, M12, 4-pin, straight Head B: cable Cable: drag chain use, PUR, halogen-free, unshielded, 10 m	DOL-1204-G10MC	6025902
	Head A: female connector, M12, 4-pin, straight Head B: cable Cable: PVC, unshielded, 15 m	DOL-1204-G15M	6010753
	Head A: female connector, M12, 4-pin, straight Head B: cable Cable: PVC, unshielded, 20 m	DOL-1204-G20M	6034401
	Head A: female connector, M12, 4-pin, angled Head B: cable Cable: PVC, unshielded, 2 m	DOL-1204-W02M	6009383
	Head A: female connector, M12, 4-pin, angled Head B: cable Cable: drag chain use, PUR, halogen-free, unshielded, 2 m	DOL-1204-W02MC	6025903
	Head A: female connector, M12, 4-pin, angled Head B: cable Cable: PVC, unshielded, 5 m	DOL-1204-W05M	6009867
	Head A: female connector, M12, 4-pin, angled Head B: cable Cable: drag chain use, PUR, halogen-free, unshielded, 5 m	DOL-1204-W05MC	6025904
	Head A: female connector, M12, 4-pin, angled Head B: cable Cable: drag chain use, Welding spark resistant, PUR, halogen-free, unshielded, 5 m	DOL-1204-W05MD	6020399
	Head A: female connector, M12, 4-pin, angled Head B: cable Cable: PVC, unshielded, 10 m	DOL-1204-W10M	6010541
	Head A: female connector, M12, 4-pin, angled Head B: cable Cable: drag chain use, PUR, halogen-free, unshielded, 10 m	DOL-1204-W10MC	6025905

	Brief description	Type	Part no.
	Head A: female connector, M12, 4-pin, angled Head B: cable Cable: PVC, unshielded, 15 m	DOL-1204-W15M	6036474
	Head A: female connector, M12, 4-pin, angled Head B: cable Cable: PVC, unshielded, 20 m	DOL-1204-W20M	6033559

SICK AT A GLANCE

SICK is one of the leading manufacturers of intelligent sensors and sensor solutions for industrial applications. A unique range of products and services creates the perfect basis for controlling processes securely and efficiently, protecting individuals from accidents and preventing damage to the environment.

We have extensive experience in a wide range of industries and understand their processes and requirements. With intelligent sensors, we can deliver exactly what our customers need. In application centers in Europe, Asia and North America, system solutions are tested and optimized in accordance with customer specifications. All this makes us a reliable supplier and development partner.

Comprehensive services complete our offering: SICK LifeTime Services provide support throughout the machine life cycle and ensure safety and productivity.

For us, that is “Sensor Intelligence.”

WORLDWIDE PRESENCE:

Contacts and other locations –www.sick.com