Online data sheet



PFT-SCA600SG1SSAVMSSZ

PFT

PRESSURE SENSORS

SICK
Sensor Intelligence.



Illustration may differ

Ordering information

Type	Part no.
PFT-SCA600SG1SSAVMSSZ	6038800

Other models and accessories → www.sick.com/PFT

Detailed technical data

Features

Medium	Liquid, gaseous
Pressure type	Compound pressure
Measuring range	0 mbar
Process temperature	–30 °C ... +100 °C
Output signal	0 V ... 10 V, 3-wire

Performance

Non-linearity	≤ ± 0.2 %, of span (Best Fit Straight Line, BFSL) according to IEC 61298-2
Accuracy	≤ ± 0.5 % of the span = ± 0.25% of span (optional for pressure ranges = 0.25 bar). Applies inclusive of non-linearity, hysteresis, non-repeatability, zero point and full scale error (corresponds to error of measurement as per IEC 61298-2) calibrated in vertical installation position
Non-repeatability	≤ ± 0.1 % of the span
Response time (10 % ... 90 %)	≤ 1 ms ≤ 10 ms at medium temperatures below < –30 °C for pressure ranges up to 25 bar or with flush-mounted membrane
Long-term drift/one-year stability	≤ ± 0.2 % of span (at reference conditions)
Temperature coefficient in rated temperature range	Mean TC of zero: ≤ 0.2 % of span / 10 K (< 0.4 % for pressure ranges ≤ 0.25 bar), Mean TC of span ≤ 0.2 % of span / 10 K
Rated temperature range	0 °C ... +80 °C
Service life	Minimum 10 Mio. life cycles

Mechanics/electronics

Process connection	G ¼ A according to DIN 3852-E
Wetted parts	Standard memrane: Stainless steel 1.4571, stainless steel 1.4534 for measuring ranges > 25 bar
Internal transmission fluid	Synthetic oil (Not available for version with standard membrane for pressure ranges > 25 bar)
Pressure port	Standard
Housing material	Stainless steel 1.4571
Electrical connection	Round connector M12 x 1, 4-pin, IP 67
Supply voltage	10 V DC ... 30 V DC 14 V DC ... 30 V DC with output signal 0 V ... 10 V
Electrical safety	Overvoltage protection: 36 V DC

	Short-circuit protection: Q_A towards M Reverse polarity protection: L^+ to M Protection class: III
Dielectric strength	500 V DC, NEC Class 02 power supply (low voltage and low current max. 100 VA even in the event of a fault)
CE-conformity	Pressure equipment directive: 97/23/EC, EMC directive: 2004/108/EC, EN 61326-2-3
Weight sensor	Approx. 200 g
Seal	Without seal
Enclosure rating	IP 67
Protection class III	✓

Ambient data

Ambient temperature	–20 °C ... +80 °C
Storage temperature	–40 °C ... +100 °C, with flush-mounted membrane and cooling element –20 °C ... +100 °C
Shock load	1000 g according to IEC 60068-2-27 (mechanical shock) 400 g according to IEC 60068-2-27 (mechanical shock) for version with integrated cooling element
Vibration load	20 g according to IEC 60068-2-6 (vibration under resonance) 10 g according to IEC 60068-2-6 (vibration undencr resonae) for version with integrated cooling element

Classifications

ECl@ss 5.0	27200614
ECl@ss 5.1.4	27200614
ECl@ss 6.0	27200614
ECl@ss 6.2	27200614
ECl@ss 7.0	27200614
ECl@ss 8.0	27200614
ECl@ss 8.1	27200614
ECl@ss 9.0	27200614
ETIM 5.0	EC002476
ETIM 6.0	EC002476
UNSPSC 16.0901	41112410

Dimensional drawing (Dimensions in mm (inch))

Housing with circular plug-in connector M12 x 1

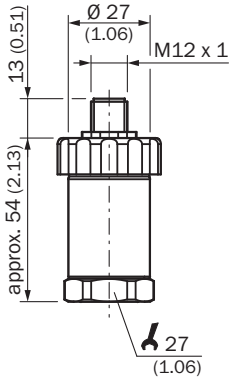

G ¼ A DIN 3852-E

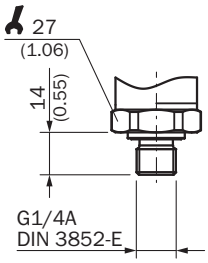

Connection type

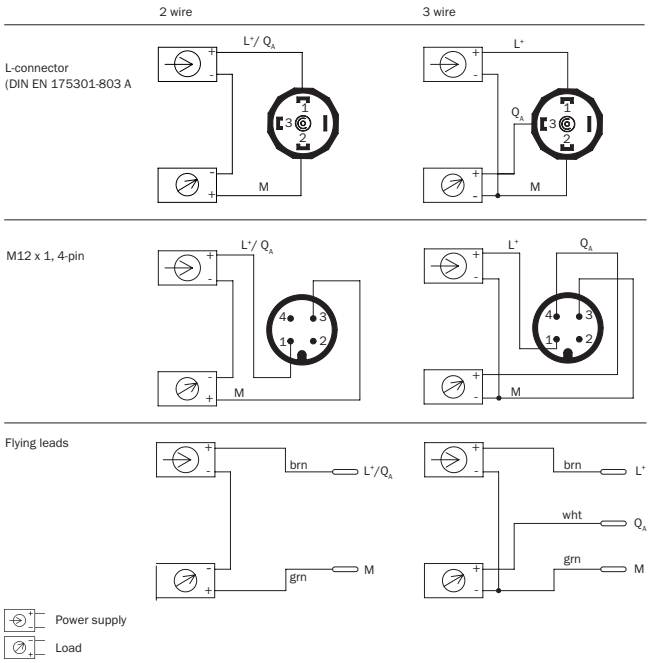

Recommended accessories

Other models and accessories ➜ www.sick.com/PFT

	Brief description	Type	Part no.
Mounting brackets and plates			
	Mounting bracket for simple and stable wall mounting of pressure sensors with 27 mm hexagon, Aluminum	BEF-FL-ALUPBS-HLDR	5322501
Plug connectors and cables			
	Head A: female connector, M12, 4-pin, straight Head B: cable Cable: PVC, unshielded, 2 m	DOL-1204-G02M	6009382
	Head A: female connector, M12, 4-pin, straight Head B: cable Cable: drag chain use, PUR, halogen-free, unshielded, 2 m	DOL-1204-G02MC	6025900
	Head A: female connector, M12, 4-pin, straight Head B: cable Cable: PVC, unshielded, 5 m	DOL-1204-G05M	6009866
	Head A: female connector, M12, 4-pin, straight Head B: cable Cable: drag chain use, PUR, halogen-free, unshielded, 5 m	DOL-1204-G05MC	6025901
	Head A: female connector, M12, 4-pin, straight Head B: cable Cable: PVC, unshielded, 10 m	DOL-1204-G10M	6010543
	Head A: female connector, M12, 4-pin, straight Head B: cable Cable: drag chain use, PUR, halogen-free, unshielded, 10 m	DOL-1204-G10MC	6025902
	Head A: female connector, M12, 4-pin, straight Head B: cable Cable: PVC, unshielded, 15 m	DOL-1204-G15M	6010753
	Head A: female connector, M12, 4-pin, straight Head B: cable Cable: PVC, unshielded, 20 m	DOL-1204-G20M	6034401
	Head A: female connector, M12, 4-pin, angled Head B: cable Cable: PVC, unshielded, 2 m	DOL-1204-W02M	6009383
	Head A: female connector, M12, 4-pin, angled Head B: cable Cable: drag chain use, PUR, halogen-free, unshielded, 2 m	DOL-1204-W02MC	6025903
	Head A: female connector, M12, 4-pin, angled Head B: cable Cable: PVC, unshielded, 5 m	DOL-1204-W05M	6009867
	Head A: female connector, M12, 4-pin, angled Head B: cable Cable: drag chain use, PUR, halogen-free, unshielded, 5 m	DOL-1204-W05MC	6025904
	Head A: female connector, M12, 4-pin, angled Head B: cable Cable: drag chain use, Welding spark resistant, PUR, halogen-free, unshielded, 5 m	DOL-1204-W05MD	6020399
	Head A: female connector, M12, 4-pin, angled Head B: cable Cable: PVC, unshielded, 10 m	DOL-1204-W10M	6010541

	Brief description	Type	Part no.
	Head A: female connector, M12, 4-pin, angled Head B: cable Cable: drag chain use, PUR, halogen-free, unshielded, 10 m	DOL-1204-W10MC	6025905
	Head A: female connector, M12, 4-pin, angled Head B: cable Cable: PVC, unshielded, 15 m	DOL-1204-W15M	6036474
	Head A: female connector, M12, 4-pin, angled Head B: cable Cable: PVC, unshielded, 20 m	DOL-1204-W20M	6033559

SICK AT A GLANCE

SICK is one of the leading manufacturers of intelligent sensors and sensor solutions for industrial applications. A unique range of products and services creates the perfect basis for controlling processes securely and efficiently, protecting individuals from accidents and preventing damage to the environment.

We have extensive experience in a wide range of industries and understand their processes and requirements. With intelligent sensors, we can deliver exactly what our customers need. In application centers in Europe, Asia and North America, system solutions are tested and optimized in accordance with customer specifications. All this makes us a reliable supplier and development partner.

Comprehensive services complete our offering: SICK LifeTime Services provide support throughout the machine life cycle and ensure safety and productivity.

For us, that is “Sensor Intelligence.”

WORLDWIDE PRESENCE:

Contacts and other locations –www.sick.com