IEC Appliance Inlet C14, Snap-in Mounting, Solder, Quick-connect, Screw or PCB Terminal



Snap-in version

C14

70° C

See below:
Approvals and Compliances

Description

- Panel Mount :
  Snap-in version , Front Side
- 1 Function
- Appliance Inlet , Pin temperature 70 °C , Protection class I
- Solder, quick-connect, screw, PCB

References

Alternative: protection class II version 6015

Weblinks

pdf datasheet, html-datasheet, General Product Information, Distributor-Stock-Check, Accessories, Detailed request for product, Microsite

Newly available variants corresponding to V-Lock mating cordset. The connector is equipped with a notch intended for use with the latching cordset. The cord latching system prevents against accidental removal of the cordset.

Technical Data

Ratings IEC	10 A / 250 VAC; 50 Hz
Ratings UL/CSA	15 A / 250 VAC; 60 Hz
Dielectric Strength	> 3 kVAC between L-N > 1.5 kVAC between L/N-PE (1 min/50 Hz)
Allowable Operation Temperature	-25 °C to 70 °C
IP-Protection	from front side IP 20 acc. to IEC 60529
Insulation cover	Suitable for appliances with protection class I acc. to IEC 61140
Terminal	Solder, quick-connect, screw, PCB
Panel Thickness S	Snap-in version 0.8/1.0/1.2/1.5/2.0/2.5/3.0/4.0 mm
Material: Housing	PA6, black or grey, UL 94V-0

appliance inlet/-outlet	C14 acc. to IEC 60320-1 UL 60320-1, CSA C22.2 no. 60320-1 (for cold conditions) pin-temperature 70 °C, 10 A, Protection Class I

Approvals and Compliances

Detailed information on product approvals, code requirements, usage instructions and detailed test conditions can be looked up in Details about Approvals

Approvals

The approval mark is used by the testing authorities to certify compliance with the safety requirements placed on electronic products.

Approval Reference Type: 6010

Approval Logo	Certificates	Certification Body	Description
	VDE Approvals	VDE	Certificate Number: 40011871
	UL Approvals	UL	UL File Number: E96454
	CSA Approvals	CSA	CSA Certification Record: 27324
	CQC Approvals	CQC	CCC Certificate Number: 2012010204574855

Product standards

Product standards that are referenced

Organization	Design	Standard	Description
IEC	Designed according to	IEC 60320-1	Appliance couplers for household and similar general purposes
UL	Designed according to	UL 60320-1	Standard for Attachment Plugs and Receptacles
CSA Group	Designed according to	CSA C22.2 no. 60320-1	General Use Receptacles, Attachment Plugs, and Similar Wiring Devices

Application standards

Application standards where the product can be used

Organization	Design	Standard	Description
IEC	Designed for applications acc.	IEC/UL 60950	IEC 60950-1 includes the basic requirements for the safety of information technologyequipment.

Compliances

The product complies with following Guide Lines

Identification	Details	Initiator	Description
CE	CE declaration of conformity	SCHURTER AG	The CE marking declares that the product complies with the applicable requirements laid down in the harmonisation of Community legislation on its affixing in accordance with EU Regulation 765/2008.
RoHS	RoHS	SCHURTER AG	EU Directive RoHS 2011/65/EU
China RoHS	China RoHS	SCHURTER AG	The law SJ / T 11363-2006 (China RoHS) has been in force since 1 March 2007. It is similar to the EU directive RoHS.
REACH	REACH	SCHURTER AG	On 1 June 2007, Regulation (EC) No 1907/2006 on the Registration, Evaluation, Authorization and Restriction of Chemicals 1 (abbreviated as "REACH") entered into force.
V-Lock	MicrositeV-Lock	SCHURTER AG	V-Lock system are based on a matching plug-dose combination. The connector is equipped with a notch intended for use with the latching cordset. The cord latching system prevents against accidental removal of the cordset.

Dimensions [mm]

Quick connect or solder terminals

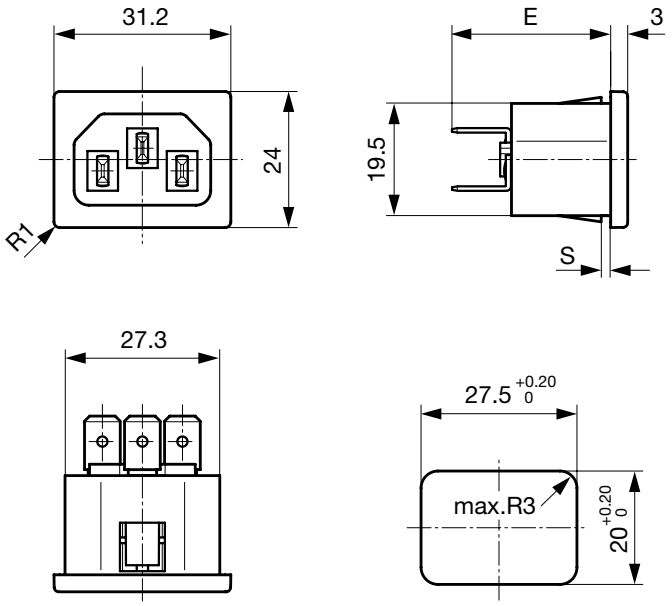

E: Quick-connect terminals 4.8x0.8 mm: 27.0 mm
E: Quick-connect terminals 6.3x0.8 mm: 28.0 mm
E: Solder terminals short: 22.5 mm
E: Solder terminals long: 26.2 mm
Dimension "S" please ref. to table order code

Quick-connect or solder terminals, housing for V-Lock

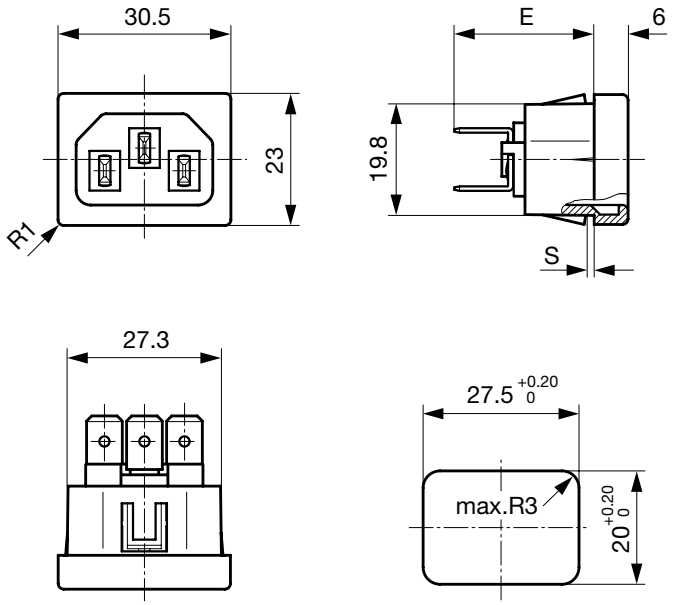

E: Quick-connect terminals 4.8x0.8 mm: 23.8 mm
E: Quick-connect terminals 6.3x0.8 mm: 24.8 mm
E: Solder terminals short: 19.3 mm
E: Solder terminals long: 23.0 mm
Dimension "S" please ref. to table order code

Screw terminals

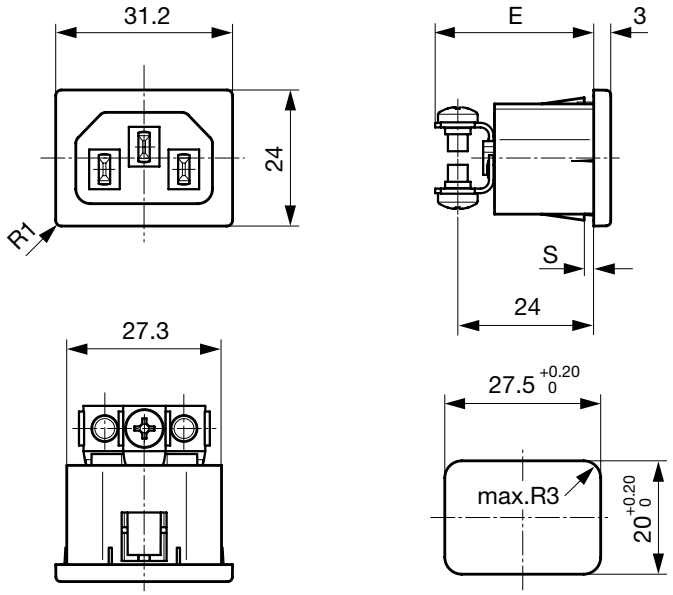

E: Screw terminals M3.5: 28.0 mm
Dimension "S" please ref. to table order code

PCB terminals

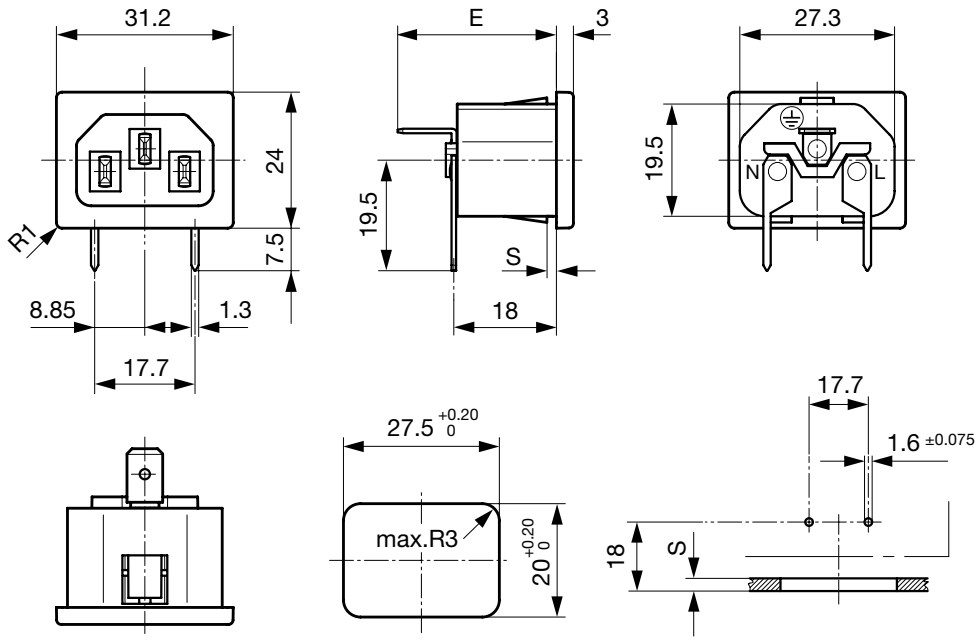

E: Quick-connect terminals 4.8x0.8 mm: 27.0 mm
E: Quick-connect terminals 6.3x0.8 mm: 28.0 mm
E: Solder terminals short: 22.5 mm
E: Solder terminals long: 26.2 mm
E: Screw terminals M3.5: 28.0
Dimension "S" please ref. to table order code

Config. Code

6010 - H - A B C 0- D - E G O

The characters are placeholders for the correspondingly keys of selections from the key tables.

6010 - **H** - A B C 0- D - E G O = Type

Type	Configuration key
protection class I	X

6010 - H - **A** B C 0- D - E G O = Terminals

Terminal L		Configuration key
short solder terminal (L = 4.8 mm)		2
long solder terminal (L = 8.5 mm)		3
PCB-terminal standard (additional solder terminal)		4
Blade terminal (4.8 x 0.8 mm)		8

6010 - H - A **B** C 0- D - E G O = Terminals

Terminal N	Configuration key
short solder terminal (L = 4.8 mm)	2
long solder terminal (L = 8.5 mm)	3
PCB-terminal standard (additional solder terminal)	4
Blade terminal (4.8 x 0.8 mm)	8
Blade terminal (6.3 x 0.8 mm)	9
screw terminal	A

Symbols similar as in table A

6010 - H - A B **C** 0- D - E G O = Terminals

Terminal L		Configuration key
Blade terminal (6.3 x 0.8 mm)		9
screw terminal		A

Terminal Ground	Configuration key
short solder terminal (L = 4.8 mm)	2
long solder terminal (L = 8.5 mm)	3
Blade terminal (4.8 x 0.8 mm)	8
Blade terminal (6.3 x 0.8 mm)	9
screw terminal	A

Symbols similar as in table A

6010 - H - A B C 0- **D** - E G O = Color

Color	Configuration key
Black	A
Grey	B

6010 - H - A B C 0- D - **E** G O = Style

Style	Configuration key
snap-in (s=panel thickness)	4

6010 - H - A B C 0- D - E **G** O = Dimension S

Dimension "S"	Configuration key
08	
10	
12	
15	
20	
25	
30	
40	

The dimension "S" is displayed in ($^{1}/_{10}$ mm). This information is also valid for the order code

6010 - H - A B C 0- D - E G **O** = Features

Features	Configuration key
without V-Lock	
V-Lock	V

All Variants

Terminals L / N	Terminal Ground	Color	Panel Thickness s [1/10 mm]	Features	Config. Code	Order Number
short solder terminal (L = 4.8 mm)	short solder terminal (L = 4.8 mm)	Black	10	without V-Lock	6010-X-2220-A-410	6162.0012
Blade terminal (4.8 x 0.8 mm)	Blade terminal (4.8 x 0.8 mm)	Black	10	without V-Lock	6010-X-8880-A-410	6162.0019
Blade terminal (6.3 x 0.8 mm)	Blade terminal (6.3 x 0.8 mm)	Black	10	without V-Lock	6010-X-9990-A-410	6162.0023
Blade terminal (6.3 x 0.8 mm)	Blade terminal (6.3 x 0.8 mm)	Black	15	without V-Lock	6010-X-9990-A-415	6162.0024
Blade terminal (6.3 x 0.8 mm)	Blade terminal (6.3 x 0.8 mm)	Black	20	without V-Lock	6010-X-9990-A-420	6162.0025
long solder terminal (L = 8.5 mm)	long solder terminal (L = 8.5 mm)	Black	10	without V-Lock	6010-X-3330-A-410	6162.0085
Blade terminal (4.8 x 0.8 mm)	Blade terminal (4.8 x 0.8 mm)	Black	15	V-Lock	6010-X-8880-A-415V	6162.0155
Blade terminal (6.3 x 0.8 mm)	Blade terminal (6.3 x 0.8 mm)	Black	15	V-Lock	6010-X-9990-A-415V	6162.0156
short solder terminal (L = 4.8 mm)	short solder terminal (L = 4.8 mm)	Black	10	V-Lock	6010-X-2220-A-410V	6162.0161
Blade terminal (4.8 x 0.8 mm)	Blade terminal (4.8 x 0.8 mm)	Black	10	V-Lock	6010-X-8880-A-410V	6162.0162
Blade terminal (4.8 x 0.8 mm)	Blade terminal (4.8 x 0.8 mm)	Black	25	V-Lock	6010-X-8880-A-425V	6162.0165

The listet variants should be available from stock Other versions on request www.schurter.com/contact

Most Popular.

Availability for all products can be searched real-time:https://www.schurter.com/en/Stock-Check/Stock-Check-SCHURTER

Packaging unit 50 Pcs

Accessories

	Description
	Assorted Covers Rear Cover

Mating Outlets/Connectors

	Category / Description	
	Appliance Outlet Overview complete	
	IEC Appliance Outlet F, Screw-on Mounting, Front Side, Solder Terminal	4787
	IEC Appliance Outlet F, Snap-in Mounting, Front Side, Solder or Quick-connect Terminal	4788
	IEC Appliance Outlet F or H, Screw-on Mounting, Front Side, Solder, PCB or Quick-connect Terminal	5091
	Appliance Outlet further types to 6010	
	Connector Overview complete	
	4782 Mounting: Power Cord, 3 x 1 mm² / 3 x 18 AWG, Cable, Connector: IEC C13	4782
	4022 Mounting: Power Supply Cord, 3 x 1.5 mm², Screw clamps, Connector: IEC C13	4022
	4785 Mounting: Power Cord, 3 x 1 mm² / 3 x 18 AWG, Cable, Connector: IEC C13	4785
	4300-06 Mounting: Power Cord, 3 x 1 mm² / 3 x 18 AWG, Cable, Connector: IEC C13	4300-06
	4012 Mounting: Power Supply Cord, 3 x 1.5 mm², Screw clamps, Connector: IEC C13	4012
	Connector further types to 6010	...

Mating Outlets/Connectors shuttered

	Power Cord Overview complete	
	VAC13KS, Overview, diverse Connector IEC C13, cord end:	VAC13KS
	Power Cord further types to 6010	

27.02.2018

The specifications, descriptions and illustrations indicated in this document are based on current information. All content is subject to modifications and amendments. Information furnished is believed to be accurate and reliable. However, users should independently evaluate the suitability and test each product selected for their own applications.