600-004, 600-007, 600-076 and 600-077 Torque Wrenches

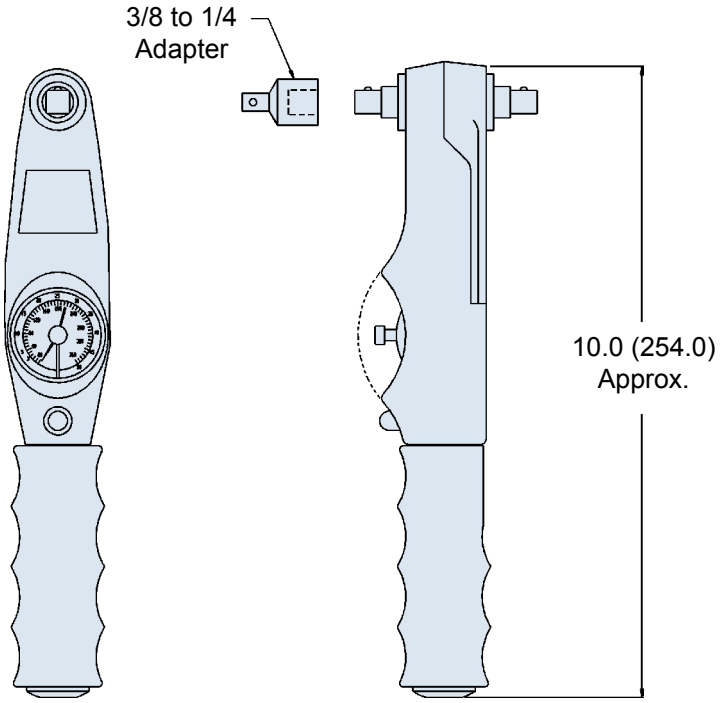

Hand-Held Torque Wrench

3/8" Drive

Requires two Panasonic SR44W or equivalent batteries

600-076 High Torque

Adjustable to desired torque level of 20 to 360 inch pounds

600-004 Standard Torque

0 - 150 lb./in. (Not Shown)

Bench-Mounted Torque Wrench

3/8" Drive

Require two Panasonic SR44W or equivalent batteries

600-077 High Torque

Adjustable to desired torque level of 20 to 360 inch pounds

600-007 Standard Torque

0 - 150 lb./in. (Not Shown)

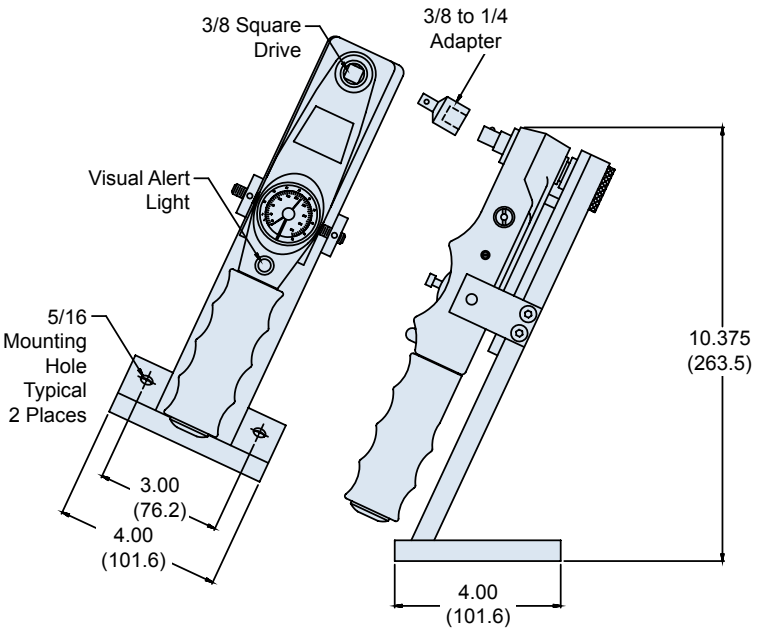

Metric dimensions (mm) shown in parentheses.

© 2008 Glenair, Inc.

CAGE Code 06324

Printed in U.S.A.