~~THIS DRAWING IS UNPUBLISHED.~~ RELEASED FOR PUBLICATION 1999 , – .
© COPYRIGHT 1999 BY TYCO ELECTRONICS CORPORATION. ALL INTERNATIONAL RIGHTS RESERVED.

LOC	DIST
1	—

REVISIONS

P	LTR	DESCRIPTION	DATE	DWN	APVD
	AW6	ECR–09–013317	25/JUN/09	PKS	MW
	AW5	ECO–07–012970	09 MAY 07	H.Y.	–

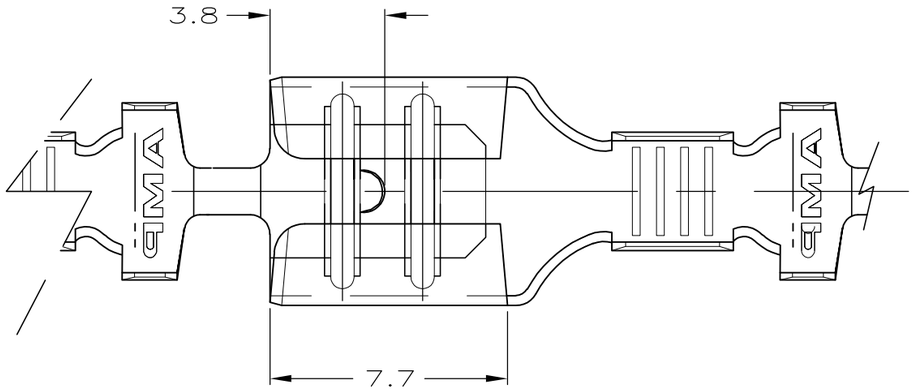

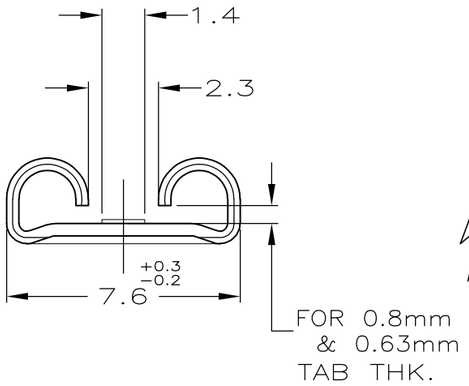

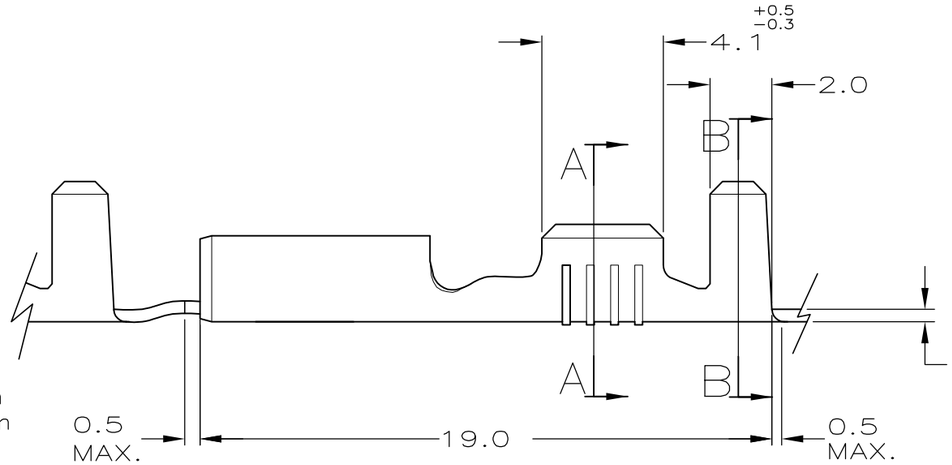

1) STATO DI FORNITURA – SCALA 1:1
(SUPPLY CONDITION – SCALE 1:1)

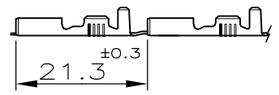

SENSO DI USCITA DEL TERMINALE DALLA BOBINA
(DIRECTION OFF TOP OF REEL)

2 SPECIFICA DI PRODOTTO 108–20019
(PRODUCT SPEC. 108–20019)
SPECIFICA DI APPLICAZIONE 114–20023
(APPLICATION SPEC. 114–20023).

3) PER LE VERSIONI IN PEZZI SCIOLTI VEDERE DISEGNO 160506
(FOR LOOSE PIECE VERSION SEE DRAWING 160506).

4 NON IN PRODUZIONE
(NOT YET RELEASE FOR PRODUCTION)

5 ADATTO PER ALTA FORZA DI ESTRAZIONE
(SUITABLE FOR HIGHER EXTRACTION FORCE)

6 ADATTO PER TAB SPESSO 0.63mm.
(FOR 0.63mm TAB THK.)

SEZIONE A–A
(SECTION A–A)

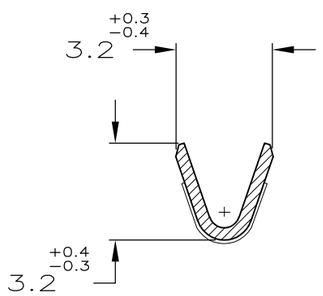

SEZIONE B–B
(SECTION B–B)

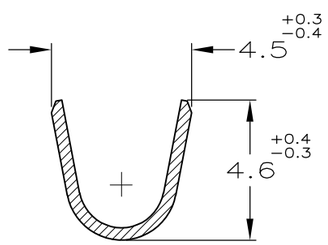

NOTE (NOTES)	FINITURA (FINISH)	MATERIALE (MATERIAL)	NUMERO (AMP P/N)	REV
6 4	STAGNATO (TINPLATED)	OTTONE (BRASS)	7–160432–3	AY
5 4	STAGNATO (TINPLATED)	OTTONE (BRASS)	7–160432–2	AW
5 4	NUDO (UNPLATED)	OTTONE (BRASS)	7–160432–1	AW
	STAGNATO (TINPLATED)	OTTONE (BRASS)	7–160432–0	AU
	NUDO (UNPLATED)	BRONZO FOSF. (PH. BRONZE)	6–160432–4	AU
	PRE NICHELATO (PRE NICKEL PLATED)	ACCIAIO (STEEL)	6–160432–3	AU
	STAGNATO (TINPLATED)	BRONZO FOSF. (PH. BRONZE)	6–160432–0	AU
	ARGRNTATO (SILVER PLATED)	OTTONE (BRASS)	5–160432–7	AW
	STAGNATO (TINPLATED)	OTTONE (BRASS)	5–160432–4	AU
	NUDO (UNPLATED)	OTTONE (BRASS)	5–160432–3	AW

THIS DRAWING IS A CONTROLLED DOCUMENT.

DIMENSIONS: mm

TOLERANCES UNLESS OTHERWISE SPECIFIED: ±0.3
0 PLC ±
1 PLC ±
2 PLC ±
3 PLC ±
4 PLC ±
ANGLES ±2°

MATERIAL / MATERIALE: SEE TABLE (VEDI LA TABELLA)
FINISH / FINITURA: SEE TABLE (VEDI LA TABELLA)

DWN H.YAALI 14 MAY 99
CHK C.TARTARI 14 MAY 99
APVD –
PRODUCT SPEC –
APPLICATION SPEC 2
WEIGHT –

Tyco Electronics
Tyco Electronics ITALIA S.p.A
COLLEGNO (TORINO)

NAME
FASTON® Connector
.250 SERIES REC. CONTACT

SIZE	CAGE CODE	DRAWING NO	RESTRICTED TO
A3	00779	C-160432	–

CUSTOMER DRAWING

SCALE	SHEET	REV
–	1 OF 1	AW6