THIS DRAWING IS UNPUBLISHED. RELEASED FOR PUBLICATION - ,- .
© COPYRIGHT - BY TYCO ELECTRONICS CORPORATION. ALL RIGHTS RESERVED.

LOC	DIST
AD	00

REVISIONS

P	LTR	DESCRIPTION	DATE	DWN	APVD
	K	EC 0G3C 0209 05	26APR05	BSV	JLG
	K1	REVISED PER ECO-09-020774	24AUG09	KK	AEG

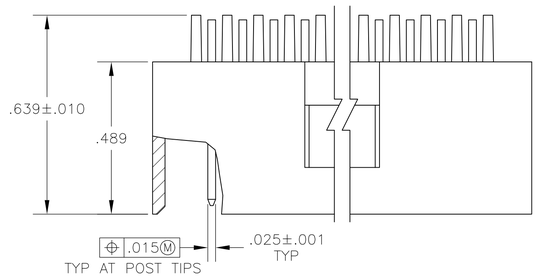

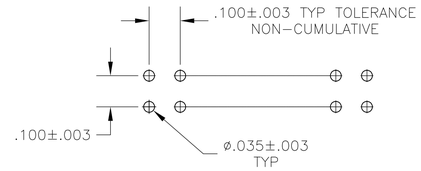

RECOMMENDED HOLE LAYOUT

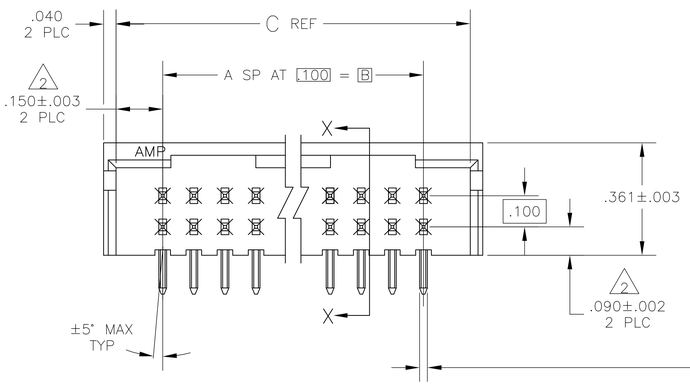

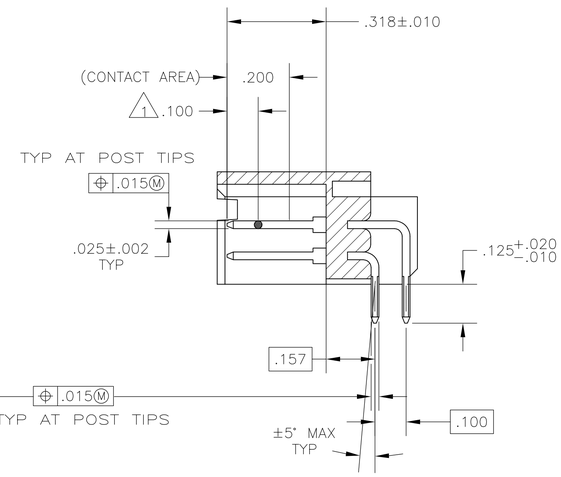

SECTION X—X

	PLATING	C	B	A	NO OF POSN	PART NUMBER
	5	3.200	2.900	29	60	7-102620-6
6 OBSOLETE	5	2.700	2.400	24	50	7-102620-1
	5	2.200	1.900	19	40	6-102620-6
OBSOLETE 6	5	1.900	1.600	16	34	6-102620-3
	5	1.700	1.400	14	30	6-102620-1
	5	1.500	1.200	12	26	5-102620-9
	5	1.400	1.100	11	24	5-102620-8
	5	1.200	.900	9	20	5-102620-6
	5	1.100	.800	8	18	5-102620-5
	5	1.000	.700	7	16	5-102620-4
	5	.900	.600	6	14	5-102620-3
	5	.800	.500	5	12	5-102620-2
	5	.700	.400	4	10	5-102620-1
	4	3.800	3.500	35	72	3 3-102620-2
	4	3.700	3.400	34	70	3 3-102620-1
	4	3.600	3.300	33	68	3 3-102620-0
	4	3.500	3.200	32	66	3 2-102620-9
	4	3.400	3.100	31	64	3 2-102620-8
	4	3.300	3.000	30	62	3 2-102620-7
	4	3.200	2.900	29	60	2-102620-6
	4	3.100	2.800	28	58	3 2-102620-5
	4	3.000	2.700	27	56	3 2-102620-4
	4	2.900	2.600	26	54	3 2-102620-3
	4	2.800	2.500	25	52	3 2-102620-2
	4	2.700	2.400	24	50	2-102620-1
	4	2.600	2.300	23	48	3 2-102620-0
	4	2.500	2.200	22	46	3 1-102620-9
	4	2.400	2.100	21	44	3 1-102620-8
	4	2.300	2.000	20	42	3 1-102620-7
	4	2.200	1.900	19	40	1-102620-6
	4	2.100	1.800	18	38	3 1-102620-5
	4	2.000	1.700	17	36	3 1-102620-4
	4	1.900	1.600	16	34	1-102620-3
	4	1.800	1.500	15	32	3 1-102620-2
6 OBSOLETE	4	1.700	1.400	14	30	1-102620-1
OBSOLETE	4	1.600	1.300	13	28	1-102620-0
6 OBSOLETE	4	1.500	1.200	12	26	102620-9
	4	1.400	1.100	11	24	102620-8
	4	1.300	1.000	10	22	3 102620-7
	4	1.200	.900	9	20	102620-6
	4	1.100	.800	8	18	102620-5
OBSOLETE 6	4	1.000	.700	7	16	102620-4
	4	.900	.600	6	14	102620-3
	4	.800	.500	5	12	102620-2
	4	.700	.400	4	10	102620-1

1. POINT OF MEASUREMENT FOR PLATING THICKNESS.
2. THE NOTED DIMENSION APPLIES AT THE INTERSECTION OF THE POST AND HOUSING
3. OBSOLETE PART NUMBER
4. POSTS:.000015 GOLD IN CONTACT AREA, .000100-.000200 MATTE TIN-LEAD ON SOLDER TAIL, ALL OVER .000050 NICKEL.
5. POSTS:.000015 GOLD IN CONTACT AREA, .000100-.000200 MATTE TIN ON SOLDER TAIL, ALL OVER .000050 NICKEL.
6. OBSOLETE PARTS: OBSOLETE CIS STREAMLINING PER D.RENAUD/D.SINISI

THIS DRAWING IS A CONTROLLED DOCUMENT.

DIMENSIONS: INCHES

TOLERANCES UNLESS OTHERWISE SPECIFIED:
0 PLC ± -
1 PLC ± -
2 PLC ± -
3 PLC ± .005
4 PLC ± -
ANGLES ± -

MATERIAL: HOUSING: FLAME RETARDANT THERMOPLASTIC; COLOR : BLACK
POST:PHOS BRONZE

FINISH: SEE TABLE

DWN H MOLL 16NOV87
CHK R FEIDT 16NOV87
APVD R FLICKER 17NOV87

PRODUCT SPEC —
APPLICATION SPEC —
WEIGHT —

Tyco Electronics
Tyco Electronics Corporation
Harrisburg, Pa 17105-3608

NAME: HEADER ASSY, MOD II, DBL ROW, .100X.100 C/L, RIGHT ANGLE, (3) SIDED SHROUD

SIZE A1 | CAGE CODE 00779 | DRAWING NO C-102620 | RESTRICTED TO —

CUSTOMER DRAWING | SCALE 4:1 | SHEET 1 OF 1 | REV K1