5N65K

Power MOSFET

5A, 650V N-CHANNEL POWER MOSFET

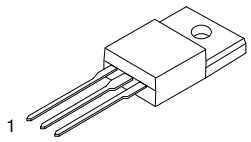

TO-220F

■ DESCRIPTION

The UTC **5N65K** is a high voltage power MOSFET designed to have better characteristics, such as fast switching time, low gate charge, low on-state resistance and high rugged avalanche characteristics. This power MOSFET is usually used in high speed switching applications at power supplies, PWM motor controls, high efficient DC to DC converters and bridge circuits.

■ FEATURES

* $R_{DS(ON)}$ = 2.4Ω @V_{GS} = 10 V
* Ultra Low Gate Charge (Typical 15 nC)
* Low Reverse Transfer Capacitance (C_{RSS} = Typical 6.5 pF)
* Fast Switching Capability
* Improved dv/dt Capability, High Ruggedness

■ SYMBOL

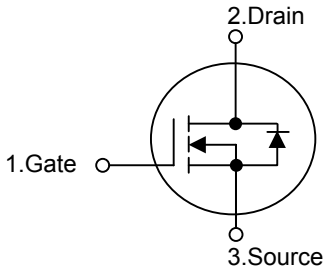

■ ORDERING INFORMATION

Ordering Number		Package	Pin Assignment			Packing
Lead Free	Halogen Free		1	2	3	
5N65KL-TF3-T	5N65KG-TF3-T	TO-220F	G	D	S	Tube

Note: Pin Assignment: G: Gate D: Drain S: Source

5N65KL-TF3-T (1)Packing Type (2)Package Type (3)Lead Free	(1) T: Tube (2) TF3: TO-220F (3) G: Halogen Free, L: Lead Free

Copyright © 2012 Unisonic Technologies Co., Ltd

■ ABSOLUTE MAXIMUM RATINGS (T_C = 25°C, unless otherwise specified)

PARAMETER		SYMBOL	RATINGS	UNIT
Drain-Source Voltage		V_{DSS}	650	V
Gate-Source Voltage		V_{GSS}	±30	V
Avalanche Current (Note 2)		I_{AR}	5	A
Continuous Drain Current		I_D	5	A
Pulsed Drain Current (Note 2)		I_{DM}	20	A
Avalanche Energy	Single Pulsed (Note 3)	E_{AS}	100	mJ
	Repetitive (Note 2)	E_{AR}	10	
Peak Diode Recovery dv/dt (Note 4)		dv/dt	4.5	V/ns
Power Dissipation		P_D	36	W
Junction Temperature		T_J	+150	°C
Operation Temperature		T_{OPR}	-55 ~ +150	°C
Storage Temperature		T_{STG}	-55 ~ +150	°C

Note: 1. Absolute maximum ratings are those values beyond which the device could be permanently damaged. Absolute maximum ratings are stress ratings only and functional device operation is not implied.
2. Pulse width limited by $T_{J(MAX)}$
3. L = 8mH, I_{AS} = 5A, V_{DD} = 50V, R_G = 25 Ω, Starting T_J = 25°C
4. I_{SD} ≤ 5A, di/dt ≤ 200A/μs, V_{DD} ≤ BV_{DSS}, Starting T_J = 25°C

■ THERMAL DATA

PARAMETER	SYMBOL	RATINGS	UNIT
Junction to Ambient	θ_{JA}	62.5	°C/W
Junction to Case	θ_{JC}	3.47	°C/W

■ ELECTRICAL CHARACTERISTICS (T_C = 25°C unless otherwise specified)

PARAMETER		SYMBOL	TEST CONDITIONS	MIN	TYP	MAX	UNIT
OFF CHARACTERISTICS							
Drain-Source Breakdown Voltage		BV_{DSS}	V_{GS} =0V, I_D = 250μA	650			V
Drain-Source Leakage Current		I_{DSS}	V_{DS} =650V, V_{GS} = 0V			1	μA
Gate-Source Leakage Current	Forward	I_{GSS}	V_{GS} =30V, V_{DS} = 0V			100	nA
	Reverse		V_{GS} =-30V, V_{DS} = 0V			-100	
Breakdown Voltage Temperature Coefficient		$\triangle BV_{DSS}/\triangle T_J$	I_D =250μA, Referenced to 25℃		0.6		V/°C
ON CHARACTERISTICS							
Gate Threshold Voltage		$V_{GS(TH)}$	V_{DS} =V_{GS}, I_D = 250μA	2.0		4.0	V
Static Drain-Source On-State Resistance		$R_{DS(ON)}$	V_{GS} =10V, I_D = 2.5A		2.0	2.4	Ω
DYNAMIC CHARACTERISTICS							
Input Capacitance		C_{ISS}	V_{DS} = 25V, V_{GS} = 0V, f = 1.0MHz		515	670	pF
Output Capacitance		C_{OSS}			55	72	pF
Reverse Transfer Capacitance		C_{RSS}			6.5	8.5	pF
SWITCHING CHARACTERISTICS							
Turn-On Delay Time		$t_{D(ON)}$	V_{DD} = 325V, I_D =5A, R_G = 25Ω (Note 1, 2)		10	30	ns
Turn-On Rise Time		t_R			42	90	ns
Turn-Off Delay Time		$t_{D(OFF)}$			38	85	ns
Turn-Off Fall Time		t_F			46	100	ns
Total Gate Charge		Q_G	V_{DS} = 520 V, I_D = 5A, V_{GS} = 10 V (Note 1, 2)		15	19	nC
Gate-Source Charge		Q_{GS}			2.5		nC
Gate-Drain Charge		Q_{GD}			6.6		nC
DRAIN-SOURCE DIODE CHARACTERISTICS AND MAXIMUM RATINGS							
Drain-Source Diode Forward Voltage		V_{SD}	V_{GS} = 0 V, I_S = 5A			1.4	V
Maximum Continuous Drain-Source Diode Forward Current		I_S				5	A
Maximum Pulsed Drain-Source Diode Forward Current		I_{SM}				20	A
Reverse Recovery Time		t_{rr}	V_{GS} = 0 V, I_S =5A, d_{IF} / dt = 100 A/μs (Note 1)		300		ns
Reverse Recovery Charge		Q_{RR}			2.2		μC

Note 1. Pulse Test: Pulse width ≤ 300μs, Duty cycle ≤ 2%
2. Essentially independent of operating temperature

■ TEST CIRCUITS AND WAVEFORMS

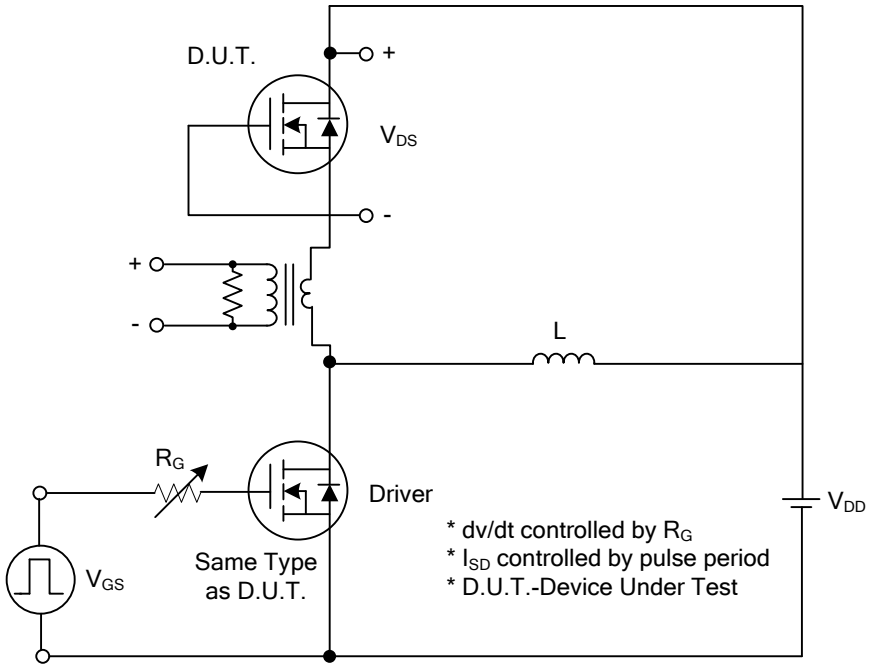

Peak Diode Recovery dv/dt Test Circuit

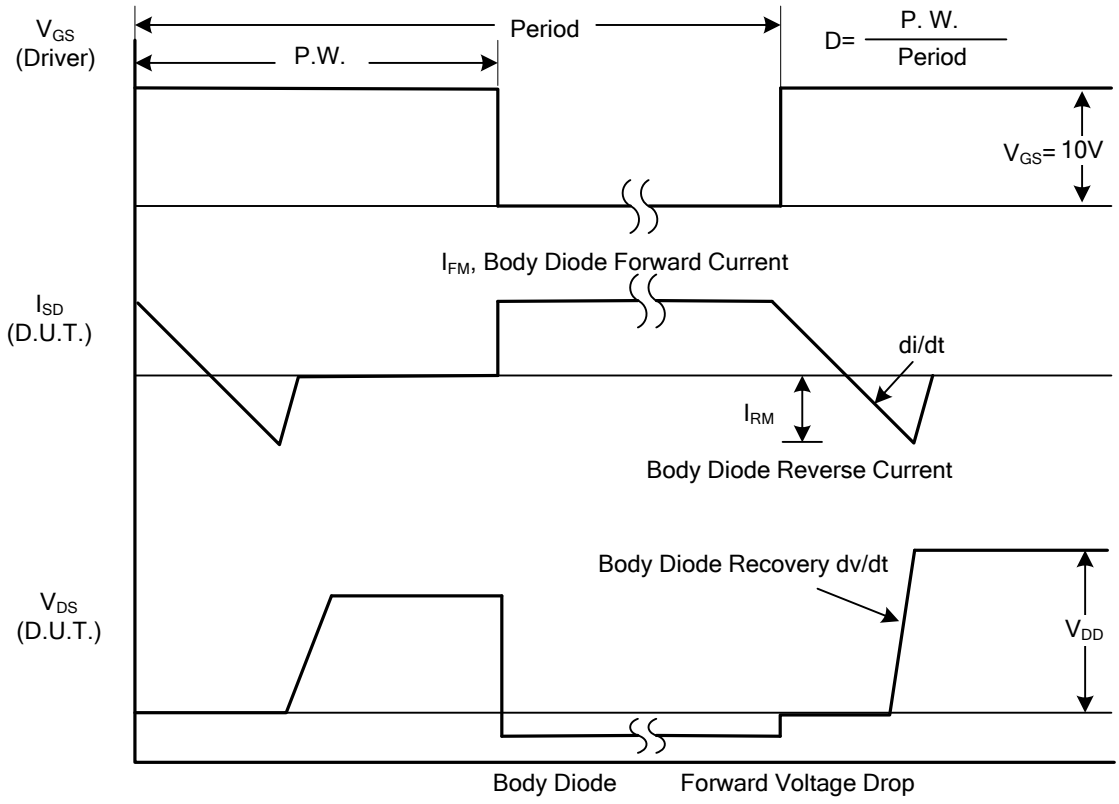

Peak Diode Recovery dv/dt Waveforms

■ TEST CIRCUITS AND WAVEFORMS (Cont.)

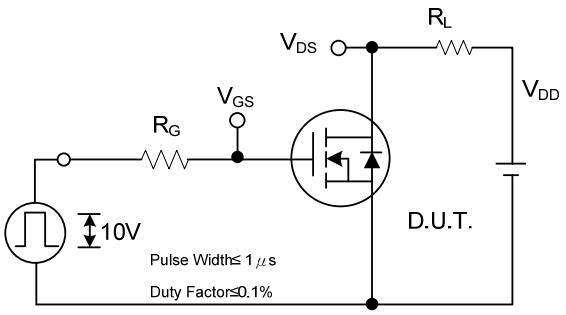

Switching Test Circuit

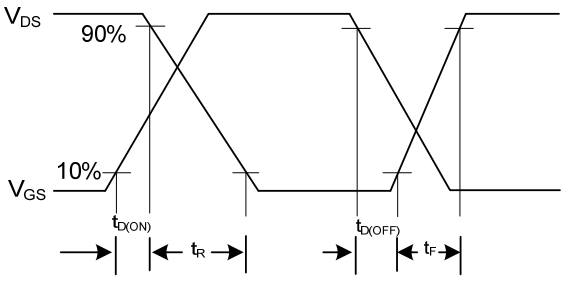

Switching Waveforms

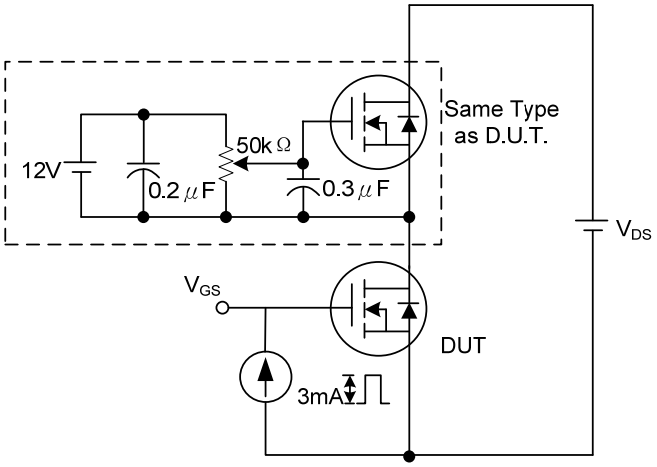

Gate Charge Test Circuit

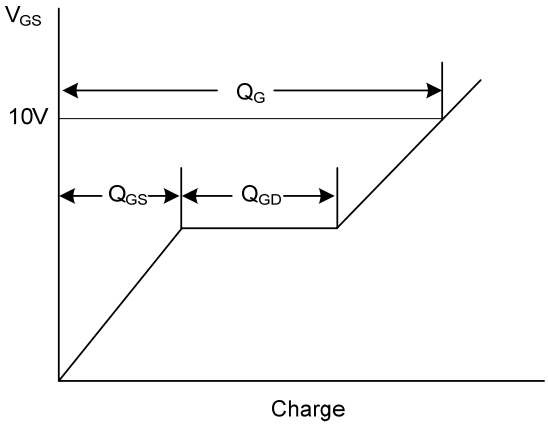

Gate Charge Waveform

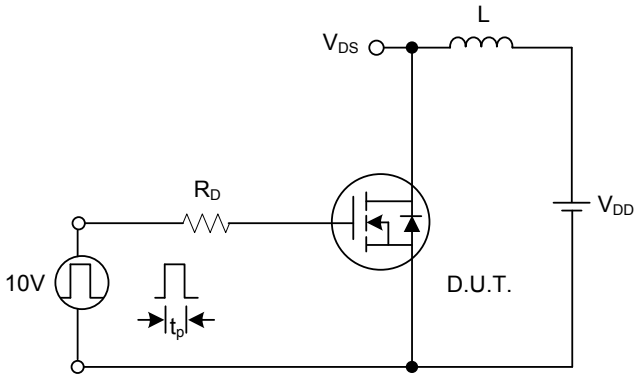

Unclamped Inductive Switching Test Circuit

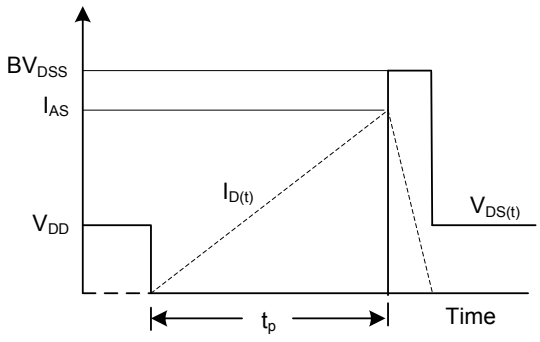

Unclamped Inductive Switching Waveforms

■ TYPICAL CHARACTERISTICS

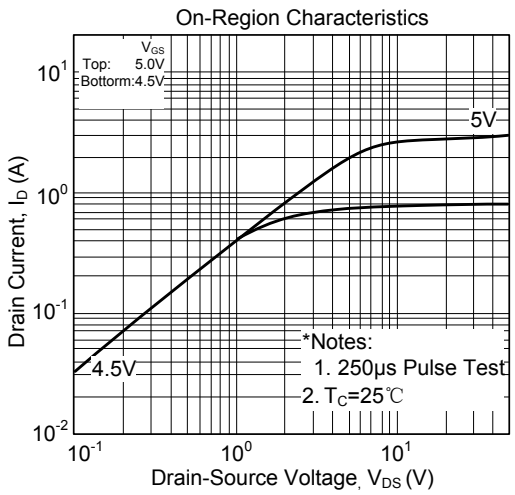

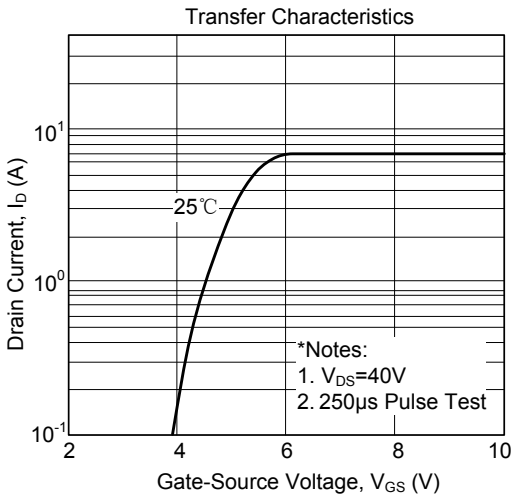

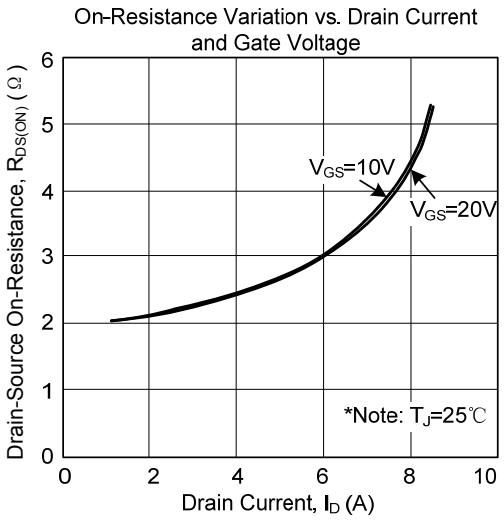

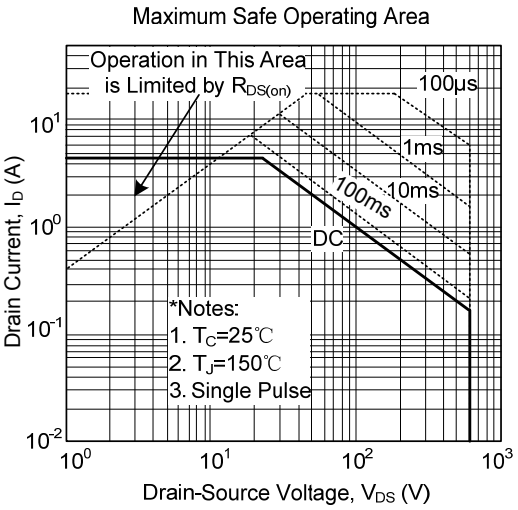

UTC assumes no responsibility for equipment failures that result from using products at values that exceed, even momentarily, rated values (such as maximum ratings, operating condition ranges, or other parameters) listed in products specifications of any and all UTC products described or contained herein. UTC products are not designed for use in life support appliances, devices or systems where malfunction of these products can be reasonably expected to result in personal injury. Reproduction in whole or in part is prohibited without the prior written consent of the copyright owner. The information presented in this document does not form part of any quotation or contract, is believed to be accurate and reliable and may be changed without notice.