HERMETIC SURFACE MOUNT FIXED VOLTAGE POSITIVE REGULATORS APPROVED TO DESC DRAWINGS

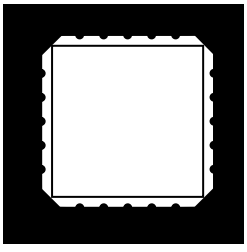

LCC 20 Fixed Voltage, Precision Positive Regulators In Hermetic Surface Mount Package

FEATURES

- Hermetic Surface Mount Package
- Output Voltages: +5V, +12V, +15V
- Output Voltages Set Internally To ±1%
- Built-In Thermal Overload Protection
- Short Circuit Current Limiting
- Hi-Rel Screening Available

DESCRIPTION

These positive regulators are supplied in a hermetically sealed surface mount package. All protective features are designed into the circuit including thermal shutdown, current limiting and safe-area control. With heat sinking, they can deliver over .5 amps of output current. These units feature internally trimmed output voltages to ±1% of nominal voltage. Standard voltages are +5V, +12V, and +15V. These units are ideally suited for Military applications where a hermetic surface mount package is required.

PART NUMBER DESIGNATOR

Standard Military Drawing Number	Omnirel Part Number
5962-8778201 2X	OM1805N2M
5962-8777601 2X	OM1812N2M
5962-8855301 2X	OM1815N2M

ABSOLUTE MAXIMUM RATINGS @ 25°C

Input Voltage . . . . . +35 V
Operating Junction Temperature Range . . . . . - 55°C to + 150°C
Storage Temperature Range . . . . . - 65°C to + 150°C
Typical Power/Thermal Charateristics:

Rated Power @ 25° C	T_C	2 W
	T_A	1040 mW
Thermal Resistance	θ_{JC}	20°C/W
	θ_{JA}	120°C/W

ELECTRICAL CHARACTERISTICS 5 Volt

V_{IN} = 10V, I_o = 100mA, -55°C ≤ T_A ≤ 125°C (unless otherwise specified)

Parameter	Symbol	Test Conditions		Min.	Max.	Unit
Output Voltage	V_{OUT}	T_A = 25°C		4.92	5.08	V
		V_{IN} = 7.5V to 20V I_O = 5mA to 500 mA, P ≤ 2 W	•	4.85	5.15	V
Line Regulation	V_{RLINE}	V_{IN} = 7.5V to 20V			5	mV
(Note 1)			•		12	mV
(Note 4)		V_{IN} = 8.0V to 12V			4	mV
			•		10	mV
Load Regulation	V_{RLOAD}	I_O = 5mA to 500 mA			25	mV
(Note 1)			•		50	mV
Standby Current Drain	I_{SCD}				6	mA
			•		6.5	mA
Standby Current Drain Change With Line	ΔI_{SCD} (Line)	V_{IN} = 7.5V to 20V	•		0.8	mA
Standby Current Drain Change With Load	ΔI_{SCD} (Load)	I_O = 5mA to 500mA	•		0.5	mA
Dropout Voltage	V_{DO}	T_A = 25°C, ΔV_{OUT} = 100mV, I_O = 500mA			2.5	V
Peak Output Current	$I_{O(pk)}$	T_A = 25°C		0.5	1.7	A
Short Circuit Current	I_{DS}	V_{IN} = 35V			0.7	A
(Note 2)			•		2.0	A
Ripple Rejection	$\frac{\Delta V_{IN}}{\Delta V_{OUT}}$	f =120 Hz, ΔV_{IN} = 10V		68		dB
		(Note 3)	•	60		dB
Output Noise Voltage	N_O	T_A = 25°C, f =10 Hz to 100KHz			40	µV/V
(Note 3)						RMS
Long Term Stability	$\frac{\Delta V_{OUT}}{\Delta t}$	T_A = 25°C, t = 1000 hrs.			75	mV
(Note 3)						

3.5

Notes:

1. Load and Line Regulation are specified at a constant junction temperature. Pulse testing with low duty cycle is used. Changes in output voltage due to heating effects must be taken into account separately.
2. Short Circuit protection is only assured up to V_{IN} = 35V.
3. If not tested, shall be guaranteed to the specified limits.
   The • denotes the specifications which apply over the full operating temperature range.
4. Minimum load current for full line regulation = 5.0 mA.

ELECTRICAL CHARACTERISTICS 12 Volt

V_{IN} = 19V, I_o = 100mA, -55°C ≤ T_A ≤ 125°C (unless otherwise specified)

Parameter	Symbol	Test Conditions		Min.	Max.	Unit
Output Voltage	V_{OUT}	T_A = 25°C		11.88	12.12	V
		V_{IN} = 14.5V to 27V	•	11.64	12.36	V
		I_O = 5mA to 500 mA, P ≤ 2W				
Line Regulation	V_{RLINE}	V_{IN} = 14.5V to 27V			18	mV
(Note 1)			•		50	mV
(Note 4)		V_{IN} = 16V to 22V			9	mV
			•		30	mV
Load Regulation	V_{RLOAD}	I_O = 5mA to 500mA			30	mV
(Note 1)			•		60	mV
Standby Current Drain	I_{SCD}				6.0	mA
			•		6.5	mA
Standby Current Drain Change With Line	ΔI_{SCD} (Line)	V_{IN} = 15V to 30V	•		0.8	mA
Standby Current Drain Change With Load	ΔI_{SCD} (Load)	I_O = 5mA to 500mA	•		0.5	mA
Dropout Voltage	V_{DO}	ΔV_{OUT} = 100mV, I_O = 500mA	•		2.5	V
Peak Output Current	$I_{O\,(pk)}$	T_A = 25°C		0.5	1.7	A
Short Circuit Current	I_{DS}	V_{IN} = 35V			0.7	A
(Note 2)			•		2.0	A
Ripple Rejection	$\frac{\Delta V_{IN}}{\Delta V_{OUT}}$	f =120 Hz, ΔV_{IN} = 10V		61		dB
		(Note 3)	•	54		dB
Output Noise Voltage	N_O	T_A = 25°C, f =10 Hz to 100KHz			40	µV/V
(Note 3)						RMS
Long Term Stability	$\frac{\Delta V_{OUT}}{\Delta t}$	T_A = 25°C, t = 1000 hrs.			120	mV
(Note 3)						

Notes:

1. Load and Line Regulation are specified at a constant junction temperature. Pulse testing with low duty cycle is used. Changes in output voltage due to heating effects must be taken into account separately.
2. Short Circuit protection is only assured up to V_{IN} = 35V.
3. If not tested, shall be guaranteed to the specified limits.
   The • denotes the specifications which apply over the full operating temperature range.
4. Minimum load current for full line regulation = 5.0 mA.

MECHANICAL OUTLINE

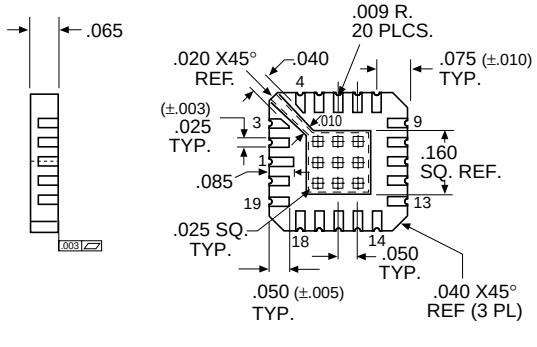

NOTE: For normal operation, V_{OUT} must be connected externally to load.

Terminal Number	
1	NC
2	V_{IN}
3	NC
4	NC
5	NC
6	NC
7	GND
8	NC
9	NC
10	V_{OUT}
11	NC
12	V_{OUT}
13	NC
14	NC
15	V_{OUT} SENSE
16	NC
17	V_{IN}
18	NC
19	NC
20	NC

3.5

ELECTRICAL CHARACTERISTICS 15 Volt

V_{IN} = 23V, I_o = 100mA, -55°C ≤ T_A ≤ 125°C (unless otherwise specified)

Parameter	Symbol	Test Conditions		Min.	Max.	Unit
Output Voltage	V_{OUT}	T_A = 25°C		14.8	15.2	V
		V_{IN} = 18.5V to 30V I_O = 5mA to 500 mA, P ≤ 2W	•	14.6	15.4	V
Line Regulation	V_{RLINE}	V_{IN} = 17.5V to 30V			20	mV
(Note 1)			•		50	mV
(Note 4)		V_{IN} = 20V to 26V			15	mV
			•		25	mV
Load Regulation	V_{RLOAD}	I_O = 5mA to 500 mA			50	mV
(Note 1)			•		90	mV
Standby Current Drain	I_{SCD}				6.0	mA
			•		6.5	mA
Standby Current Drain Change With Line	ΔI_{SCD} (Line)	V_{IN} = 18.5V to 30V	•		0.8	mA
Standby Current Drain Change With Load	ΔI_{SCD} (Load)	I_O = 5mA to 500mA	•		0.5	mA
Dropout Voltage	V_{DO}	T_A = 25°C, ΔV_{OUT} = 100mV, I_O = 500mA			2.5	V
Peak Output Current	$I_{O\,(pk)}$	T_A = 25°C		0.5	1.7	A
Short Circuit Current	I_{DS}	V_{IN} = 35V			0.7	A
(Note 2)			•		2.0	A
Ripple Rejection	$\frac{\Delta V_{IN}}{\Delta V_{OUT}}$	f =120 Hz, ΔV_{IN} = 10V		54		dB
		(Note 3)	•	52		dB
Output Noise Voltage	N_O	T_A = 25°C, f =10 Hz to 100KHz			40	µV/V
(Note 3)						RMS
Long Term Stability	$\frac{\Delta V_{OUT}}{\Delta t}$	T_A = 25°C, t = 1000 hrs.			150	mV
(Note 3)						

Notes:

1. Load and Line Regulation are specified at a constant junction temperature. Pulse testing with low duty cycle is used. Changes in output voltage due to heating effects must be taken into account separately.
2. Short Circuit protection is only assured up to V_{IN} = 35V.
3. If not tested, shall be guaranteed to the specified limits.
   The • denotes the specifications which apply over the full operating temperature range.
4. Minimum load current for full line regulation = 5.0 mA.