DIALIGHT PART NUMBER	LED COLOR
591-2001-002F	HI. EFFICIENCY RED
591-2001-007F	
591-2001-013F	
591-2101-002F	AlGaAs RED
591-2101-007F	
591-2101-013F	
591-2201-002F	HI. INTENSITY GREEN
591-2201-007F	
591-2201-013F	
591-2301-002F	GREEN
591-2301-007F	
591-2301-013F	
591-2401-002F	YELLOW
591-2401-007F	
591-2401-013F	
591-2501-002F	GaAsP ORANGE
591-2501-013F	
591-2601-002F	InGaN BLUE
591-2601-007F	
591-2601-013F	
591-2701-002F	AlInGaP YELLOW
591-2701-007F	
591-2701-013F	
591-2801-002F	InGaN WHITE
591-2801-007F	
591-2801-013F	
591-2901-002F	InGaN GREEN
591-2901-007F	
591-2901-013F	

RoHS Compliant 591-2X01-0XXF

Part Numbers with the "F" suffix ending are RoHS Compliant.
For Example: 591-2701-007F
Packaging is marked with "RoHS Compliant" label or equivalent markings.
Parts can be reflow soldered per RoHS reflow profile, wave soldered, dip soldered, or hand soldered using typical lead-free soldering process with max 260°C temp. for 5 sec.

REV	ECN NO	REVISIONS	DRN	CKD	APP	DATE
A	——	NEW RELEASE	TWC	N.O.	MES	2-3-06
B	——	UPDATED LED SPECS (ADDED MIN AND MAX INTENSITY); UPDATED NOTES; ADDED METRIC DIMS.	KLJ	ALV	N.O.	5-8-09
C	——	ADDED MIN AND MAX DOMINANT WAVELENGTHS FOR AlGaAs RED.	KLJ	JLC	N.O.	6-5-09
D	——	ADDED P/Ns 591-2801-002F, -007F, -013F	AJF	KLJ	CJC	9-4-09
E	——	ADDED P/Ns 591-2501-002F, -013F	AJF	KLJ	NO	9-14-09

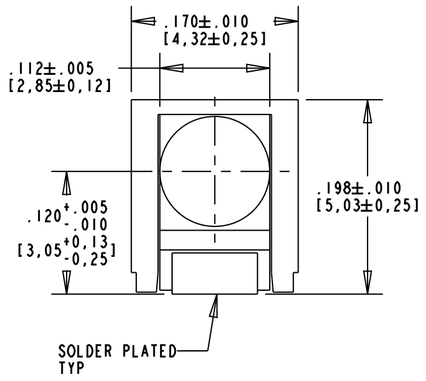

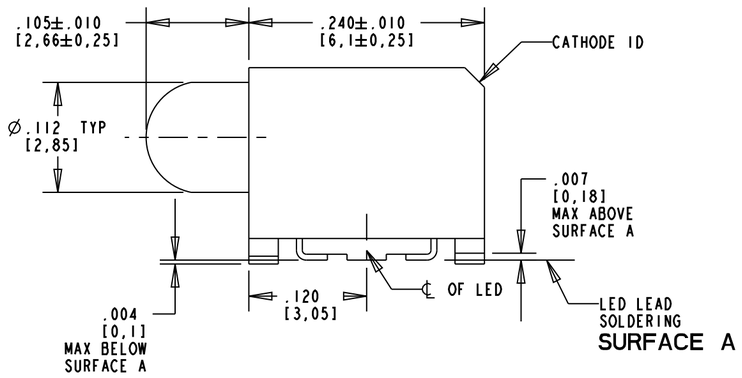

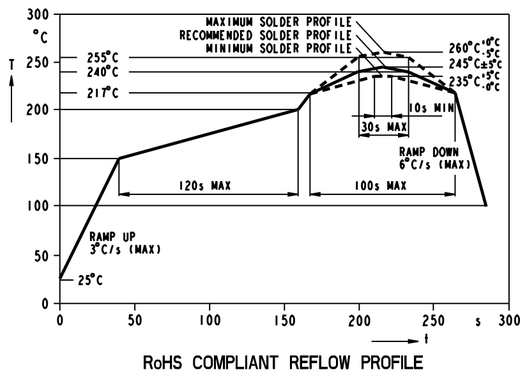

RoHS COMPLIANT REFLOW PROFILE

LED COLOR	OPERATING CHARACTERISTICS AT 25°C AMBIENT												
	LUMINOUS INTENSITY TEST CONDITION	LUMINOUS INTENSITY (mcd)			FORWARD VOLTAGE TEST CONDITION	FORWARD VOLTAGE (V)		REVERSE CURRENT (μA)	DOMINANT WAVELENGTH (nm)			PEAK WAVELENGTH (nm)	VIEWING ANGLE (DEG)
		MIN	TYP	MAX		TYP	MAX	MAX	MIN	TYP	MAX	TYP	TYP
HI. EFFICIENCY RED	IF = 10mA	2.8	4.5	7.0	IF = 10mA	2.0	2.5	10	622	628	634	635	40
AlGaAs RED	IF = 10mA	11	18	28	IF = 10mA	1.75	2.5	10	633	645	655	660	40
HI. INTENSITY GREEN	IF = 10mA	7	12	18	IF = 10mA	2.0	2.5	10	564	570	576	572	40
GREEN	IF = 10mA	3.5	4.8	7.0	IF = 10mA	2.0	2.5	10	564	570	576	572	40
YELLOW	IF = 10mA	3.5	5.7	9.0	IF = 10mA	2.0	2.5	10	580	587	595	586	40
GaAsP ORANGE	IF = 10mA	2.3	9.2	16.0	IF = 10mA	2.0	2.5	10	600	606	609	610	40
InGaN BLUE	IF = 10mA	4.5	6.0	11.2	IF = 10mA	3.5	4.3	10	462	465	468	428	40
AlInGaP YELLOW	IF = 20mA	35	50	70	IF = 20mA	2.0	2.4	10	580	587	595	591	40
InGaN WHITE	IF = 10mA	90	135	180	IF = 10mA	3.1	3.7	10	*X=.285; .33; .367 *Y=.259; .33; .401			——	40
InGaN GREEN	IF = 20mA	90	160	280	IF = 20mA	3.4	4.05	10	515	525	535	523	40

*COLOR COORDINATES

LED COLOR	ABSOLUTE MAXIMUM RATINGS AT 25°C AMBIENT						
	POWER DISSIPATION (mW)	CONT. FWD CURRENT (mA)	PEAK FORWARD CURRENT (mA) (t≤10μs, D=.005)	LINEAR DERATION	REVERSE VOLTAGE (V)	OPERATING TEMPERATURE	STORAGE TEMPERATURE
HI. EFFICIENCY RED	95	30	500	0.75 mA/°C FROM 60°C	12	-40°C /+100°C	-40°C /+100°C
AlGaAs RED	90	30	500	0.75 mA/°C FROM 60°C	12	-40°C /+100°C	-40°C /+100°C
HI. INTENSITY GREEN	95	30	500	0.75 mA/°C FROM 60°C	12	-40°C /+100°C	-40°C /+100°C
GREEN	95	30	500	0.75 mA/°C FROM 60°C	12	-40°C /+100°C	-40°C /+100°C
YELLOW	95	30	500	0.75 mA/°C FROM 60°C	12	-40°C /+100°C	-40°C /+100°C
GaAsp ORANGE	95	30	500	0.75 mA/°C FROM 60°C	5	-40°C /+100°C	-40°C /+100°C
InGaN BLUE	90	20	200	0.44 mA/°C FROM 55°C	5	-40°C /+100°C	-40°C /+100°C
AlInGaP YELLOW	80	30	200	1.0 mA/°C FROM 85°C	12	-40°C /+100°C	-40°C /+100°C
InGaN WHITE	80	20	200	0.6 mA/°C FROM 75°C	5	-40°C /+100°C	-40°C /+100°C
InGaN GREEN	114	20	100 (t≤1ms, D=0.1)	0.5 mA/°C FROM 50°C	5	-55°C /+100°C	-55°C /+100°C



LED SCHEMATIC

TAPING SPECIFICATION

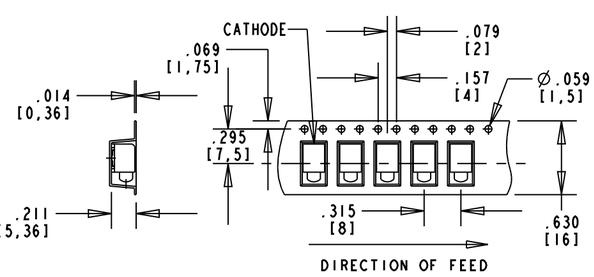

TOLERANCE: .004 UNLESS OTHERWISE SPECIFIED

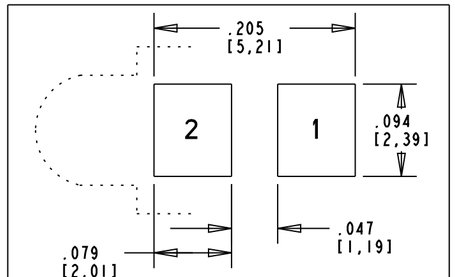

COMPONENT SIDE
RECOMMENDED PC BOARD LAND PATTERN
(DIM'S ±.004)

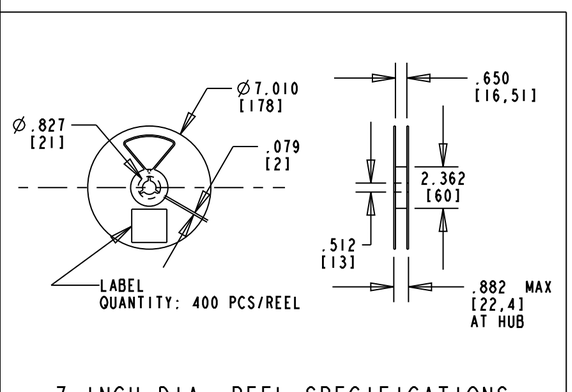

7 INCH DIA. REEL SPECIFICATIONS

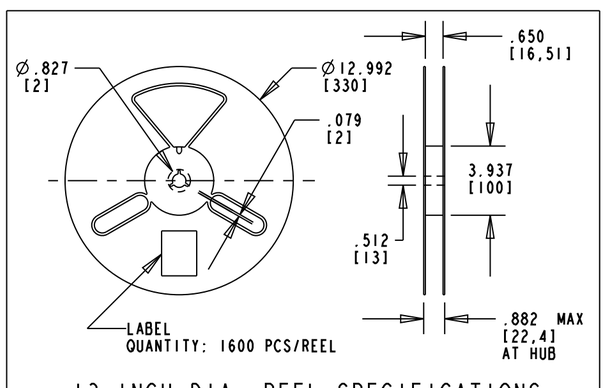

13 INCH DIA. REEL SPECIFICATIONS

NOTES :

1. PAD NUMBERS ARE FOR REFERENCE ONLY, DESIGNATION NON-EXISTENT ON PART.
2. STORAGE CONDITIONS FOR TAPED PRODUCT: RE-TAPING MAY BE NECESSARY FOR PRODUCTS STORED MORE THAN TWELVE MONTHS.
3. ORDER QUANTITY IS LED ASSEMBLIES, NOT REELS.
4. ...-002F SUFFIX MEANS PARTS ARE PACKED ON A 20 pc SAMPLE STRIP
   ...-007F SUFFIX MEANS PARTS ARE PACKED ON A 7 INCH REEL , 400 pcs/REEL
   ...-013F SUFFIX MEANS PARTS ARE PACKED ON A 13 INCH REEL , 1600 pcs/REEL
5. LENS MOVEMENT IN RELATIONSHIP TO THE HOUSING IS .009" T.I.R. VERTICALLY AND .007" T.I.R. HORIZONTALLY.
6. FRONT AND REAR TERMINALS OF THE ASSEMBLY TO BE WITHIN .005 COPLANARITY.
7. DIALIGHT PART NUMBERS = 591-2X01-002F, 591-2X01-007F, 591-2X01-013F
8. MOISTURE SENSITIVITY LEVEL: "2a" FOR P/N'S 591-2901-0XXF
   "2" FOR ALL OTHER P/N'S
9. THIS ASSEMBLY CONTAINS ELECTROSTATIC DISCHARGE SENSITIVE DEVICES (ESDS). MAINTAIN ALL PRECAUTIONARY MEASURES DURING ASSEMBLY, HANDLING AND STORAGE IN ACCORDANCE WITH IPC-A-610.

ATTENTION:
OBSERVE PRECAUTIONS FOR HANDLING ELECTROSTATIC SENSITIVE DEVICES

THIS DRAWING AND THE CONTENTS HEREIN ARE CONFIDENTIAL AND THE SOLE PROPERTY OF DIALIGHT. REPRODUCTION OF THIS DRAWING OR CONSTRUCTION OF ANY PARTS WITHIN THIS DRAWING ARE FORBIDDEN WITHOUT THE WRITTEN CONSENT OF DIALIGHT.

SCALE: 8.000	DRAWING NUMBER C-17354 REV E
ALL DIM'S IN: INCHES (MM)	
TOLERANCES: UNLESS OTHERWISE SPECIFIED FRACTIONS: ±1/64 DECIMALS (.XX): ±.02 DECIMALS (.XXX): ±.015 ANGLES: ±3°	TITLE SURFACE MOUNT CBI - ROUND LENS RoHS COMPLIANT MATERIAL
FINISH:	Dialight 1501 ROUTE 34 SOUTH FARMINGDALE, NJ 07727
FSCM 83330	SHEET 1 OF 1 FAMILY TABLE: