PROPER USE GUIDELINES

Cumulative Trauma Disorders can result from the prolonged use of manually powered hand tools. Hand tools are intended for occasional use and low volume applications. A wide selection of powered application equipment for extended-use, production operations is available.

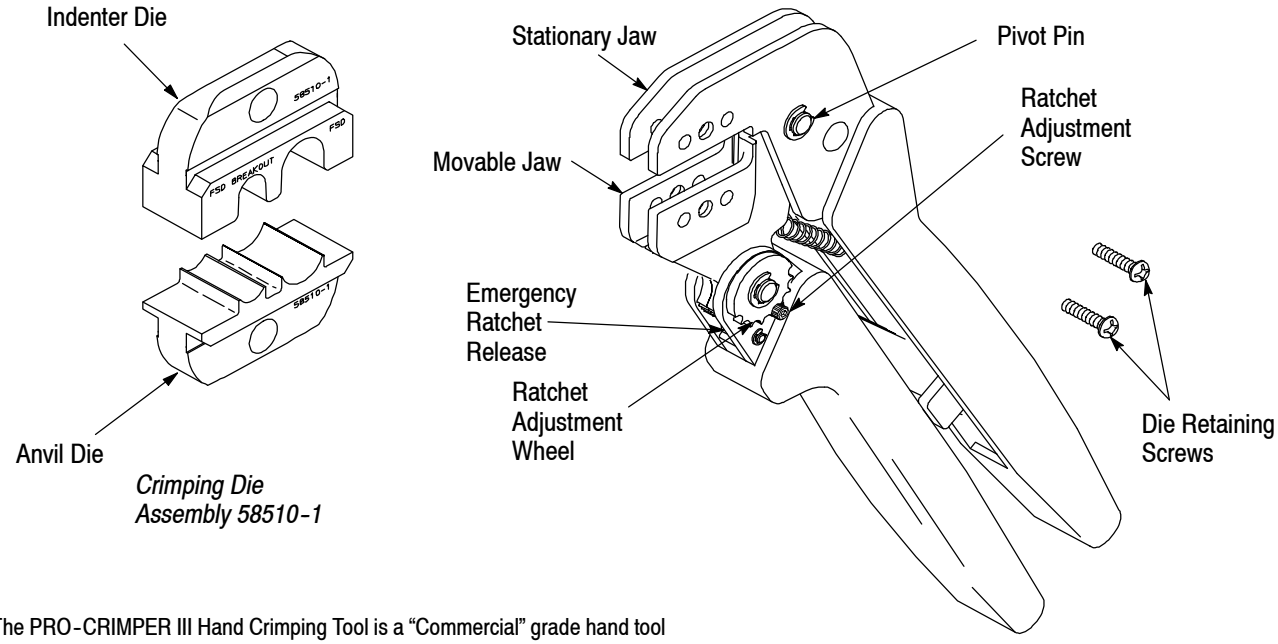

The PRO-CRIMPER III Hand Crimping Tool is a "Commercial" grade hand tool and is designed primarily for field installation, repair, maintenance work, or prototyping in industrial, commercial, or institutional applications. Product crimped with this tool will meet the crimp height requirement for hand tools in the appropriate 114 application specification, but may not comply with other feature parameters of the specification. Tyco Electtronics offers a variety of tools to satisfy your performance requirements. For additional information, contact the Tooling Assistance Center at 1-800-722-1111.

Figure 1

1. INTRODUCTION

This instruction sheet provides application and maintenance procedures for Crimping Die Assembly 58510-1. See Figure 1. When used in PRO-CRIMPER III Hand Crimping Tool Frame Assembly 58532-[ ] the die assembly crimps Fixed-Shroud Duplex fiber-optic connectors with base part numbers 501780 and 502015, and FSD Breakout Kit Assembly 502020.

The die assembly and frame assembly together form PRO-CRIMPER III Hand Crimping Tool Assembly 58519-1. The die assembly can be purchased separately, or purchased with the hand tool assembly.

For connector assembly procedures, refer to instruction sheet 408-9373 (FSD Connectors) or 408-9469 (FSD Breakout Kit Assembly). For information concerning the use and maintenance of Frame Assembly 58532-1, refer to instruction sheet 408-4020.

Read these and all referenced materials before using the die assembly.

Reasons for reissue are in Section 7, REVISION SUMMARY.

2. DESCRIPTION

The die assembly features an indenter die and an anvil die. When closed, the dies form two crimping chambers, which crimp the crimp ring of the connector onto the connector strain relief and the cable strength members. The larger crimping chamber is used to crimp FSD connectors. Both chambers are used for the breakout kit assembly: the larger to crimp duplex crimp rings and the smaller to crimp simplex crimp rings. Each die is held in the tool jaws with a single screw. See Figure 2.

©2010 Tyco Electronics Corporation, Harrisburg, PA
All International Rights Reserved
TE logo and Tyco Electronics are trademarks.
*Trademark. Other products, logos, and company names used are the property of their respective owners.

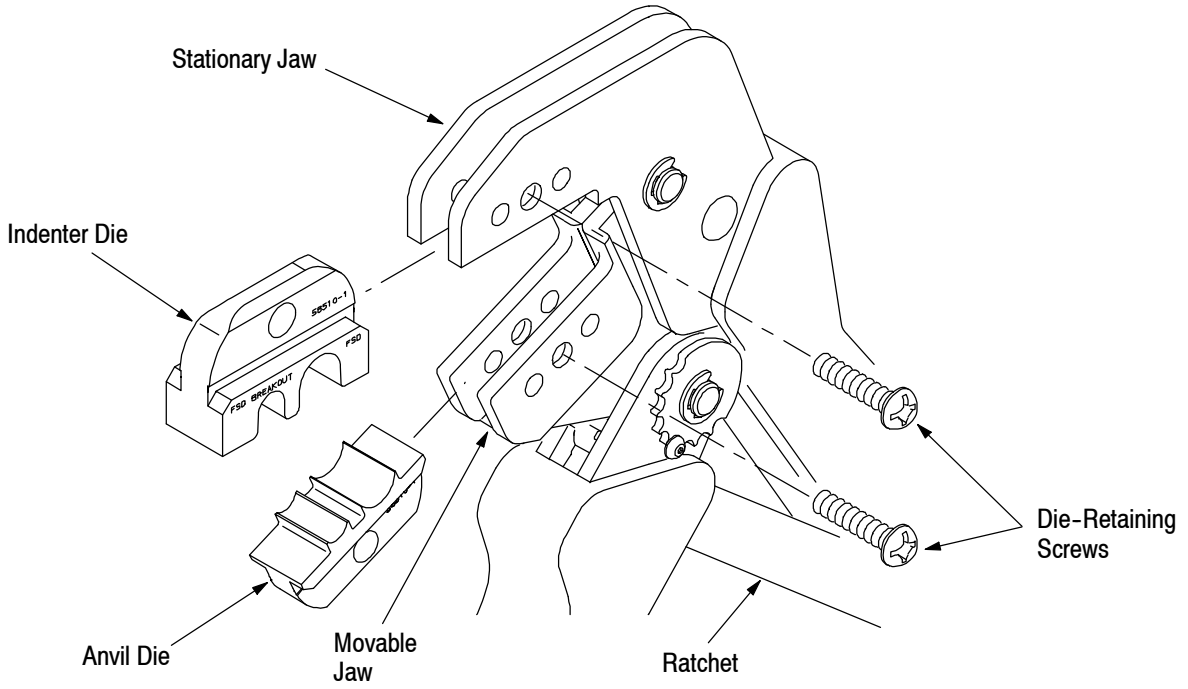

Figure 2

3. DIE INSTALLATION (Figure 2)

1. Close the tool handles until the ratchet releases; then allow the tool handles to open FULLY.

2. Install anvil die in the movable jaw of the tool frame. Align the die with the retaining screw hole; then secure die with the die-retaining screw. Do NOT fully tighten.

3. Install indenter die in the stationary jaw of the tool frame. Slowly close the tool handles, allowing the dies to align themselves. When dies are properly aligned, securely tighten both screws with the appropriate hex wrench.

4. CRIMPING PROCEDURE (Figure 3)

Prepare connector and cable according to the instructions packaged with the connector, and proceed as follows:

1. Close the tool handles until the ratchet releases; then allow the tool handles to open FULLY.

2. Place the strain relief assembly (with the outer crimp ring in place) in the appropriate crimping chamber so that the flange of the strain relief rests against the sides of the die. See Figure 3.

3. Close the tool handles until the ratchet releases; then open the tool handles to remove the crimped connector.

5. MAINTENANCE/INSPECTION

5.1. Maintenance

1. Remove dust, moisture, and other contaminants with a clean, soft brush, or a clean, soft, lint-free cloth. Do NOT use any objects that could damage the dies or tool.

2. Make sure that the proper die-retaining screws are properly secured.

3. When the dies are not in use, store them in a clean, dry area.

4. Store the tool with the tool handles closed to prevent objects from becoming lodged within the jaws.

5.2. Inspection

1. Remove all lubrication and accumulated film from the dies by immersing the dies in a suitable commercial degreaser.

2. Make certain that all die-retaining screws and die components are properly secured.

3. Inspect the crimping surfaces for flattened, chipped, worn, or cracked areas. If damage is evident, the dies must be replaced. Refer to Section 6, REPLACEMENT.

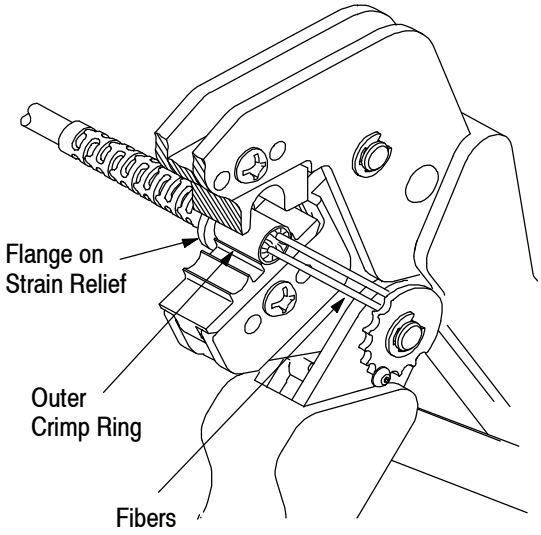

Figure 3

5.3. Measuring Die Opening

The die assembly will perform correctly as long as: (1) the product specified is correct for the application, (2) the specific die assembly is used, (3) the die assembly has been measured to ensure that the openings are correct, and (4) the tool has been adjusted correctly. Figure 4 provides information on die openings.

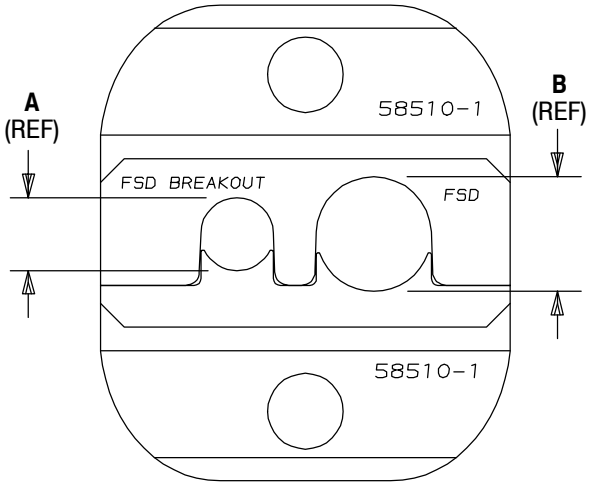

Die Closure Dimensions (± .10 mm [± .004 In.])	
A	B
5.44 mm [.214 in.]	8.53 mm [.336 in.]

Figure 4

5.4. Ratchet Adjustment (Figure 5)

The tool frame assembly ratchet mechanism features an adjustment wheel with numbered settings. If the crimp is not acceptable, adjust the ratchet as follows:

1. Remove the lockscrew from the ratchet adjustment wheel.

2. With a screwdriver, adjust the ratchet wheel from the opposite side of the tool.

3. Observe the ratchet adjustment wheel. If a tighter crimp is required, rotate the adjustment wheel COUNTERCLOCKWISE to a higher-numbered setting. If a looser crimp is required, rotate the adjustment wheel CLOCKWISE to a lower-numbered setting.

4. Replace the lockscrew.

5. Make a sample crimp and measure the crimp height. If the crimp is acceptable, replace and secure the lockscrew. If the dimension is unacceptable, continue to adjust the ratchet, and again measure a sample crimp.

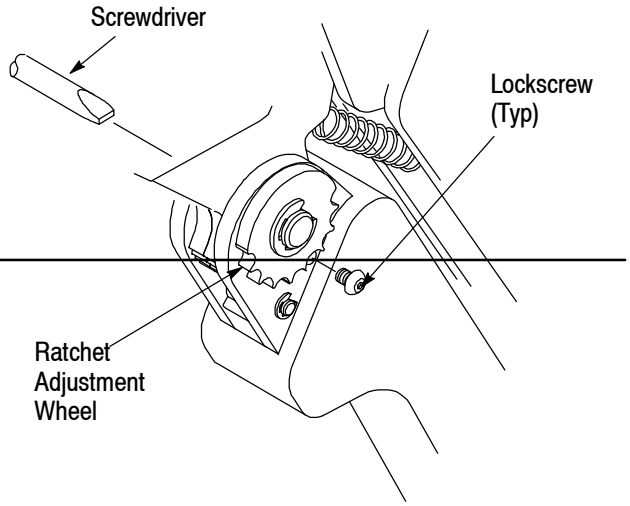

Figure 5

6. REPLACEMENT

Crimping Die Assembly 58510-1 was inspected before shipment. Tyco Electronics recommends that the dies be inspected immediately upon arrival at your facility to ensure that the dies have not been damaged during shipment.

Available separately, PRO-CRIMPER III Hand Crimping Tool Repair Kit 679221-1 includes a replacement nut and a variety of pins, rings, screws, and springs.

If the dies are damaged or worn excessively, they must be replaced.

Order the repair kit and replaceable parts through your Tyco Electronics representative, or call 1-800-526-5142, or send a facsimile of your purchase order to 1-717-986-7605, or write to:

CUSTOMER SERVICE (38-35)
TYCO ELECTRONICS
PO BOX 3608
HARRISBURG PA 17105-3608

7. REVISION SUMMARY

Revisions to this instruction sheet include:

- Changed PRO-CRIMPER II to PRO-CRIMPER III Hand Tool;
- Applied TE logo; and
- Updated format to current corporate requirements.

Tooling Compatible With Die Assembly 58510-1

PRO-CRIMPER III Hand Tool 354940-1 (Instruction Sheet 408-9930)

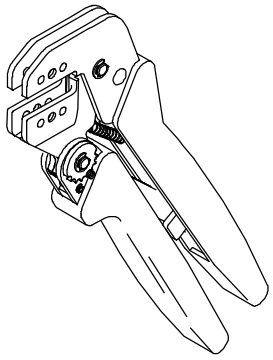

SDE-SA Hand Tool 9-1478240-0 (Instruction Sheet 408-8851)

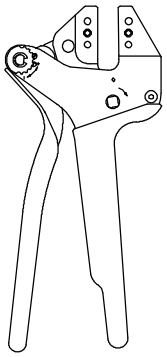

SDE Bench Terminator 1490076-2 (Customer Manual 409-10052)

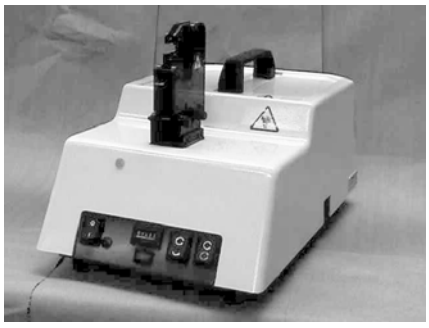

SDE Bench Terminator 1490076-2 (Customer Manual 409-10052)

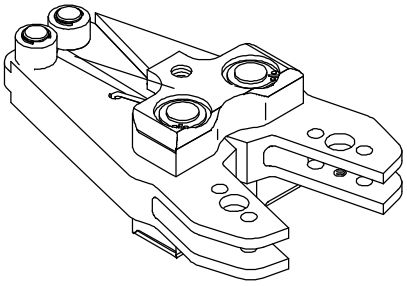

Battery Tool (Shouldered Die) 1725837-1, -2 (Customer Manual 409-10053)

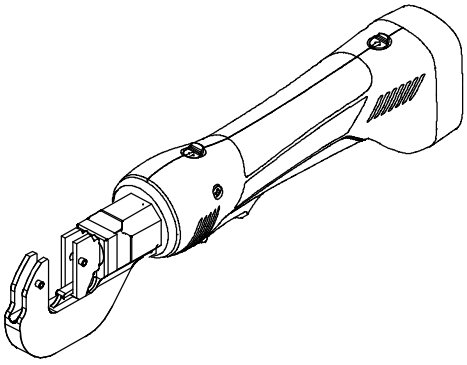

Battery Tool (Pin Die) 1213890-1, -2 (Customer Manual 409-10065)

