Pomona®

Model 5830
Flexible Maxigrabber® Test Clip

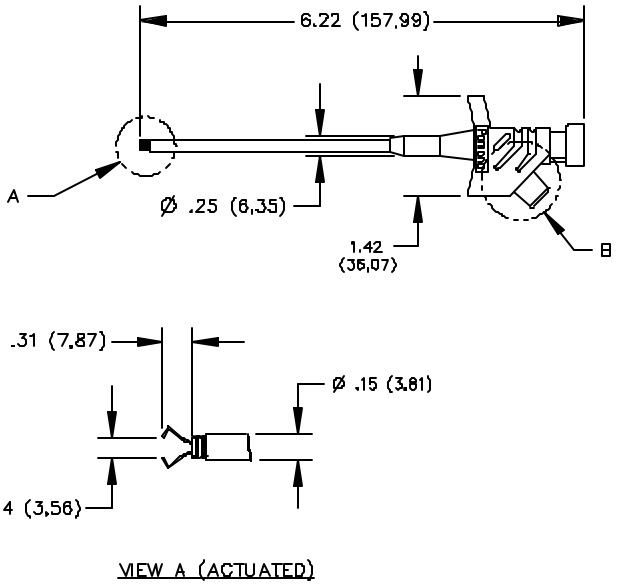

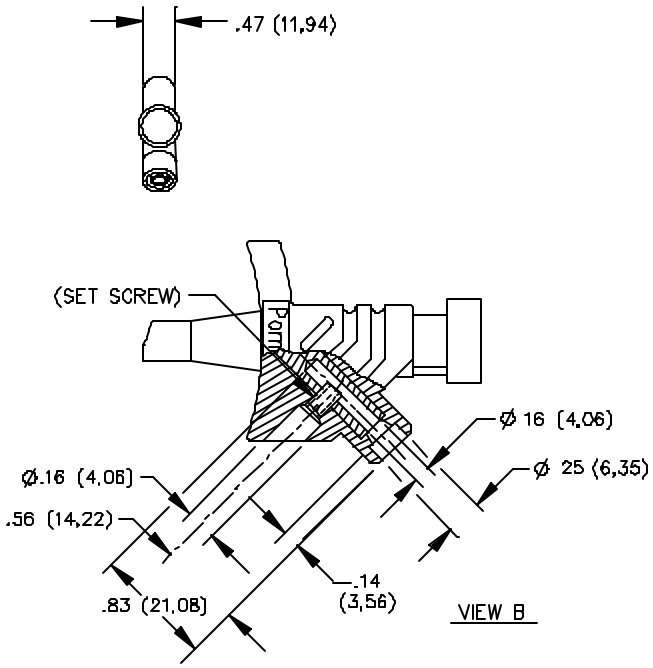

FEATURES:

- Mates to Model #1440, 4702 and most standard banana plugs.
- Use set screw to build custom cable with Pomona "Do It Yourself" products.
- Accepts 18 to 22 AWG wire (for custom cable).
- This flexible clip has a rotating pincer type contact to make access easier.
- Standard banana jack and screw for direct wire termination.

MATERIALS:

Wire: Steel.
Insulation: Thermoplastic (handle and knob)
Color: Black (heat shrink tube)

RATINGS:

Environmental:
Operating Temperature: +80°C. (+176°F.) Max.
Electrical:
Operating Voltage: 300 VRMS/DC
Current: 5 Amperes
Mechanical:
Grip: Up to ∅ .157 (4.0).

ORDERING INFORMATION: Model 5830-*
*= Color, -0 Black, -2 Red
Ordering Example: 5830-2 Color is Red

All dimensions are in inches. Tolerances (except noted): .xx = ±.02" (,51 mm), .xxx = ± .005" (,127 mm).
All specifications are to the latest revisions. Specifications are subject to change without notice.
Registered trademarks are the property of their respective companies. Made in USA

Sales: 800-490-2361 Fax: 888-403-3360
Technical Assistance: 800-241-2060

Mouser Electronics

Authorized Distributor

Click to View Pricing, Inventory, Delivery & Lifecycle Information:

Pomona:

5830-02 5830-0 5830-2