VM-1 Application Board 3 (Issue A) Data Sheet

Introduction

The 5811 is an application board for use with the VM-1 Control Module. It provides connections for modules such as the 5809 QVGA display interface and 5810 ethernet controller. To support the QVGA the board has connectors for both display and touch screen. The board also has an RS232 serial port, an optional second serial port, an I²C connector on Bus 1, and an on-board EEPROM for non-volatile data storage. Additionally all the digital and analogue channels on the VM-1 connector are available.

This document applies only to Issue A of the board. Issue B has extensive extra capabilities and a slightly different layout and is better suited to QVGA use.

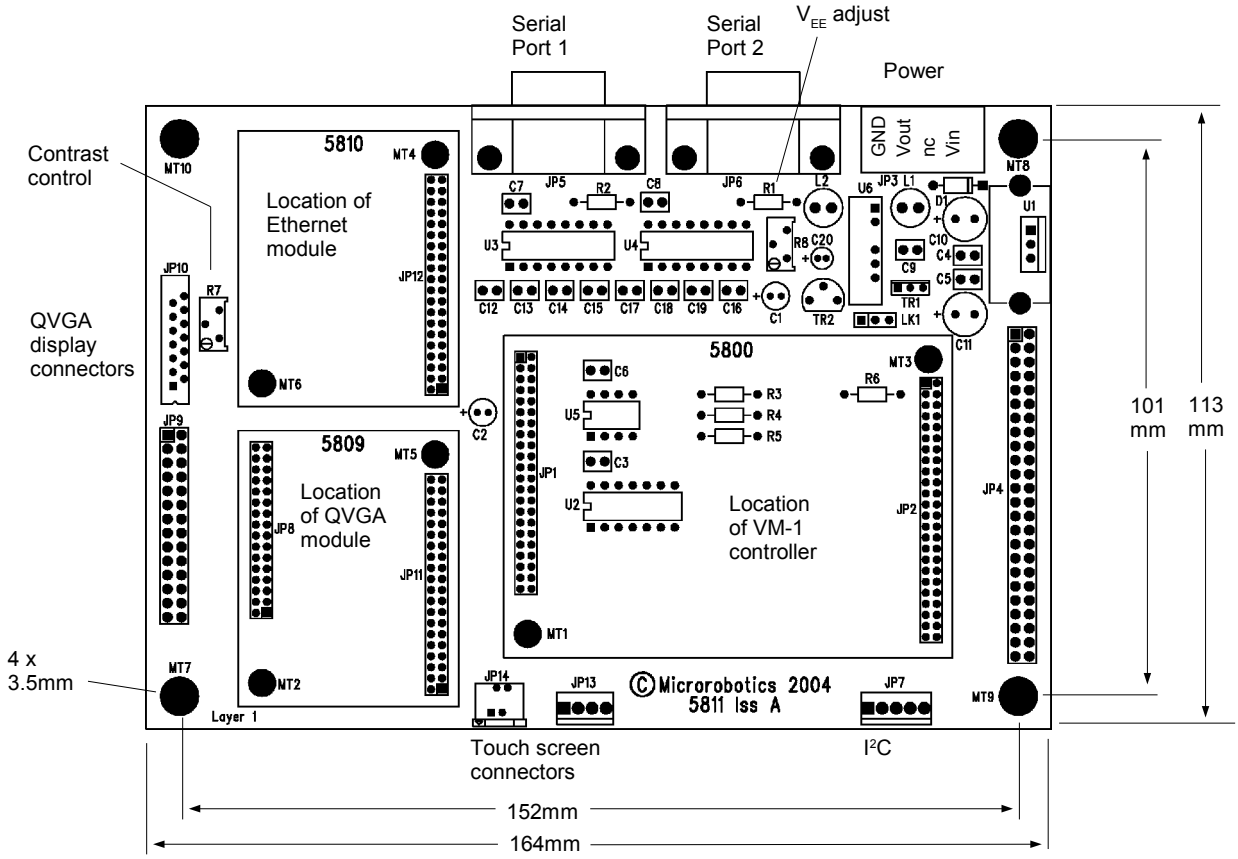

Unpacking

You should have:

- 5811 Application Board. This document applies to Issue A of the board only.
- Power Connector
- These Instructions

WARNING: Users of Micro-Robotics Control Equipment should be aware of the possibility of a system failure, and must consider the implications of such failure. Micro-Robotics Ltd. can accept no responsibility for loss, injury, or damage resulting from the failure of our equipment. Use of our products in applications where their failure to perform as specified could result in injury or death is expressly forbidden.

© 2004 Micro-Robotics Ltd
The Old Maltings
135 Ditton Walk
Cambridge
CB5 8QB

tel: +44 (0) 1223 523100
fax: +44 (0) 1223 524242
sales@microrobotics.co.uk
www.microrobotics.co.uk

What You Will Need

To start using the application board you will need:

- VM-1 Control Module (5800 or 5801) with language ROM (5803)
- 8 to 30V 300mA unregulated DC power supply
- An RS232 serial lead to connect the 5811 to your host computer. Use a lead that would be used to connect two PCs together (a "Null Modem" cable)
- A PC running terminal emulation software such as Hyperterminal or Tera Term Pro.
- The VM-1 and Venom-SC manual set
- Optionally a QVGA card (5809) or ethernet card (5810)

Serial Ports

The RS232 level shifter ICs are socketed. Leave them in if you wish to use standard RS232 voltage levels (normal with serial cables such as links to a PC). If you need to use the logic-level signals (typically for internal connection to small PCB modules and ICs), remove the RS-232 IC and use the serial channels on JP4.

Serial Port 1 RS232

Pinout

Connector: JP5

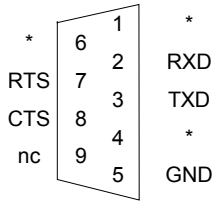

* Pins 1, 4 and 6 are connected to each other on the 5811

Configuration

Serial Port 1 is already configured for you in the default startup procedure with the line:

```
MAKE serial AsynchronousSerial(38400, 1, 1)
```

Serial Port 2 RS232

Pinout

Connector: JP6

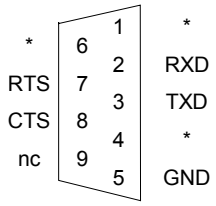

* Pins 1, 4 and 6 are connected to each other on the 5811

Configuration

Serial port is not created by default. You can create it with a line like this:

```
MAKE serial AsynchronousSerial(38400, 2, 1)
```

application boards

The connections for the QVGA and ethernet boards are very similar, but for practical convenience and simplicity one socket is dedicated to each type. It is possible to use both modules at once.

The common module interface is described first.

Module Bus Connectors JP11, JP12

The following table describes the general module interface pinout.

Pin	*Signal*	*Description*
1	VCC	+5V supply
2	GND	Ground
3	D1	Data bus
4	D0	
5	D3	
6	D2	
7	D5	
8	D4	
9	D7	
10	D6	
11	VCC	+5V supply
12	GND	Ground
13	A1	Address bus
14	A0	
15	A3	
16	A2	
17	A5	
18	A4	
19	A7	
20	A6	
21	A9	
22	A8	
23	VCC	+5V supply
24	GND	Ground
25	A11	Address bus
26	A10	
27	A13	
28	A12	
29	A15	
30	A14	
31	HWR/	Write strobe
32	A16	Address bus
33	WAIT/	Delays write cycle
34	RD/	Read Strobe
35	RESET/	System Reset
36	SELECT/	See below
37	SDA	I^2C data
38	SCL	I^2C clock
39	VCC	+5V supply
40	GND	Ground

Implementation on the application board

SDA and SCL are from the VM-1's I^2C Bus 1.

The SELECT/ line is different for each module.

In the Venom language, The MAKE statements for the QVGA display, touch screen and ethernet interface have parameters which select the I^2C bus and the correct module's SELECT/ signal.

Ethernet Module

Connection

If an ethernet module 5811 is required, plug it into the ethernet module socket and secure it with a 6mm spacer, M2.5 screw and nut using hole MT6. A second spacer and mounting screw in MT4 is optional.

Use a length of CAT5 UTP cable to connect the ethernet board to a hub or switch that will support 10Mbit operation. Exceptionally when the VM-1 is one end of a two-node network you can link the nodes directly with a UTP "crossover" cable.

Configuration

```
MAKE eth Protocol("eth", 1, $d0, my_ip_address)
```

The second and third parameter specify I^2C bus 1 and the correct addressing information to select the ethernet position on the 5811 application board.

See the Venom Networking Guide for more information, including the use of the `my_ip_address` parameter.

QVGA Module

N.B. Before powering up with a display connected, first adjust the supply voltage (see page 6)

If a QVGA module 5810 is required, plug it into the QVGA module sockets. Securing via mounting holes is optional as the board is fairly well held in by the connectors and is not subject to cable pulling forces.

Connect a Hitachi display type SP14Q002 or compatible to JP10. The application board's corner mounting holes enable it to be mounted directly on pillars on the display module.

Other types of display can be connected via a suitable adapter to JP9, which will also work with the adapter supplied with the SP14Q002 starter kit.

The Hitachi touch screen can be connected to JP14.

Other electrically compatible touch screens can be adapted to connect to JP13.

Consult the pinout diagrams below for interconnection details.

JP10 – Flat Cable Display Connector

This FPC connector is compatible with the Hitachi SP14Q002 display.

1	LCDD4	Display data
2	LCDD5	Display data
3	LCDD6	Display data
4	LCDD7	Display data
5	LCDPWROFF	H=display off, L=display on
6	LCDFRAME	Frame clock
7		
8	LCDLINE	Line clock
9	LCDCLK	Dot clock
10	V_{CC}	+5V supply
11	GND	
12	V_{EE}	-21V ±1V (for Hitachi)
13	GND	
14	GND	

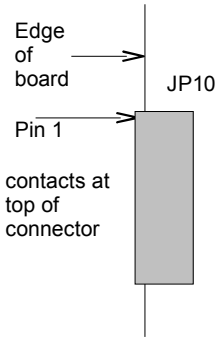

JP9 – Generic QVGA Display Connector

This is compatible witrh the connector adapter supplied with the Hitachi SP14Q002 display starter kit. It provides all the connections available from the QVGA display driver module, including touch screen connections, and is designed to be easily adapted to the requirements of most other QVGA display hardware via a suitable intermediate connector adapter. For more information on the signal usage see the QVGA (5809) data sheet.

0.1" pin header 2 x 14 pins

1	D0	LCDD4
2	D1	LCDD5
3	D2	LCDD6
4	D3	LCDD7
5	D4	
6	D5	
7	D6	
8	D7	
9	GND	
10	LCDPWROFF	H=display off, L=display on
11	LCDCLK	Dot clock
12	LCDFRAME	Frame clock
13	GPIO0	General purpose I/O
14	LCDLINE	Line clock
15	LCDPWRON	L=display off, H=display on
16	GND	
17	V_{CC}	
18	V_{EE}	Negative supply: set with R8 and LK1
19	V_{ADJ}	Contrast voltage: set with R7
20	GND	
21	VBATT1	Analogue inputs (see QVGA documenation)
22	VBATT2	
23	IN1	
24	IN2	
25	X+	Touch Screen Inputs (see QVGA documentation)
26	X-	
27	Y+	
28	Y-	

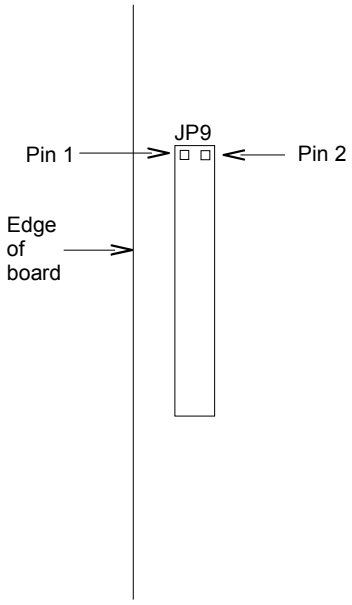

JP14 – Touch Screen 1

This 4-way FPC connector is compatible with the touch screen fitted to the Hitachi SP14Q002.

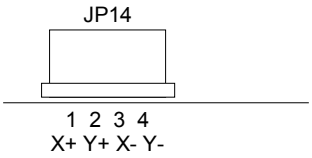

JP13 – Touch Screen 2

The same touch screen inputs are also provided on this 4 pin header.

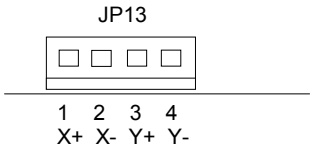

Configuration

```
MAKE lcdpower Digital(22)
lcdpower.On
```

The above two lines are needed to turn the power on to the DC-DC converter which provides V_{EE}. The required timing of this relative to initializing the display controller depends on the display hardware manufacturer - in some cases this may need to be done after creating the display object.

```
MAKE display GLCD (3,320,240, $e0)
```

The value of the last parameter selects the correct module when addressing the GLCD on the application board.

```
MAKE t Touchscreen(0, 1,  144)
```

The second parameter selects I^2C bus 1.

Display Supply and Contrast Voltage Adjustment

QVGA displays require a negative voltage supply. The voltage range required varies with the make of display, and the exact optimum voltage may vary from one unit to another as well as with temperature. Depending on the display specification the voltage may be referenced to ground or to the +5 volt rail. Additionally a contrast adjustment voltage is needed. Sometimes this is achieved by varying the supply voltage itself, otherwise by a separate control voltage supplied though another pin on the connector. The application board can provide a negative rail V_{EE} of 0 to -24 volts referenced to either ground or the +5V rail, adjustable and with a low source impedance from an emitter follower buffer. A contrast adjustment voltage derived from V_{EE} via a 10k pot R7 is also available.

R8 controls the V_{EE} voltage. Set this before adjusting R7.

LK1: link pins 1-2 for V_{EE} referenced to V_{CC}; link 2-3 for V_{EE} referenced to GND.

R7 sets the contrast adjustment voltage V_{ADJ}. Set V_{EE} with R8 before adjusting R7.

To avoid damage do not connect the display initially and follow this sequence:

1. Set V_{EE} and the link LK1 for the correct voltage.
2. Power off.
3. Connect the display.
4. Power on.
5. Re-adjust V_{EE} (R8) as it may have dropped slightly because of the current drain of the display.
6. If the display uses V_{ADJ}, adjust R7 for best contrast.

I²C Buses

There are two I²C buses available. Bus 1 comes out on connector JP7 which is compatible with other Micro-Robotics products. Bus 2 is available though 2 pins on JP4.

I²C Bus 1

Connector: JP7

5 way 0.1" header

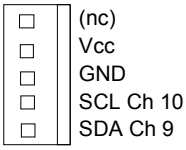

The following I²C addresses are assigned:

144 Touch Screen (if QVGA module fitted)

160 Clock/Calendar on VM-1

162 EEPROM on application board

164 EEPROM on ethernet module (if fitted)

I²C Bus 2

JP4 pin 25: SDA (Ch 23)

JP4 pin 24: SCL (Ch 24)

Configuration

```
MAKE net I2CBus     ; create bus 1
MAKE net I2CBus(1)  ; create bus 1 (same as above)
MAKE net2 I2CBus(2) ; create bus 2
```

VM-1 Expansion Connector JP4

A pattern of pads suitable for a 0.1" double row header marked JP4 is provided for external connections to the VM-1 channels. The pin numbers on the connector have the same functions as those on JP2 on the VM1 – see the VM-1data sheet for pin assignments and notes on channel use. All are available, with the following exceptions or limitations:

JP4 Pin	*Use*	*Notes*
24	WAIT/	Not connected to JP4; used by QVGA module
26,28	I²C Bus 1	Note I²C bus 1 is used on board and also available on JP7
30,32,34,36	Serial port 1	Normally used for terminal access via JP5. If you really want to use serial port 1 at logic levels or use these channels for general digital I/O, remove IC U3 from its socket.
29,31,33,35	Serial port 2	If you wish to use serial port 2 at logic levels instead of RS-232 voltages, or use these channels for general digital I/O, remove IC U4 from its socket.

EEPROM

The EEPROM is at address 162 on I²C Bus 1. It contains 256 bytes of non-volatile rewritable memory typically used by applications for storing configuration information.

Configuration

```
MAKE eeprom SafeData(0, 1, 162)
```

Power Supply

The 5811 may be powered from a supply voltage range of 7 to 30 volts unregulated DC. The current consumption depends on the modules fitted and other devices attached, and whether the VM-1 processor is idle. There is also a regulated 5V output for powering external circuits.

Drawing a high current or using a high input supply voltage will cause high dissipation in the regulator heatsink. The heatsink and regulator are positioned so that they can be attached to an external heatsink or casing if neecessary. Note that the regulator tab and heatsink are connected to ground.

The application board will draw typically 100 – 150mA by itself.

The ethernet card draws approximately 80mA extra when fitted.

The QVGA display draws approximately 40mA extra when fitted.

Pinout

Connector JP3 – Plug Provided

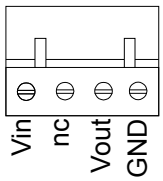

4-way pluggable screw terminal

Schematics

Main VM-1 and Module interface, Power

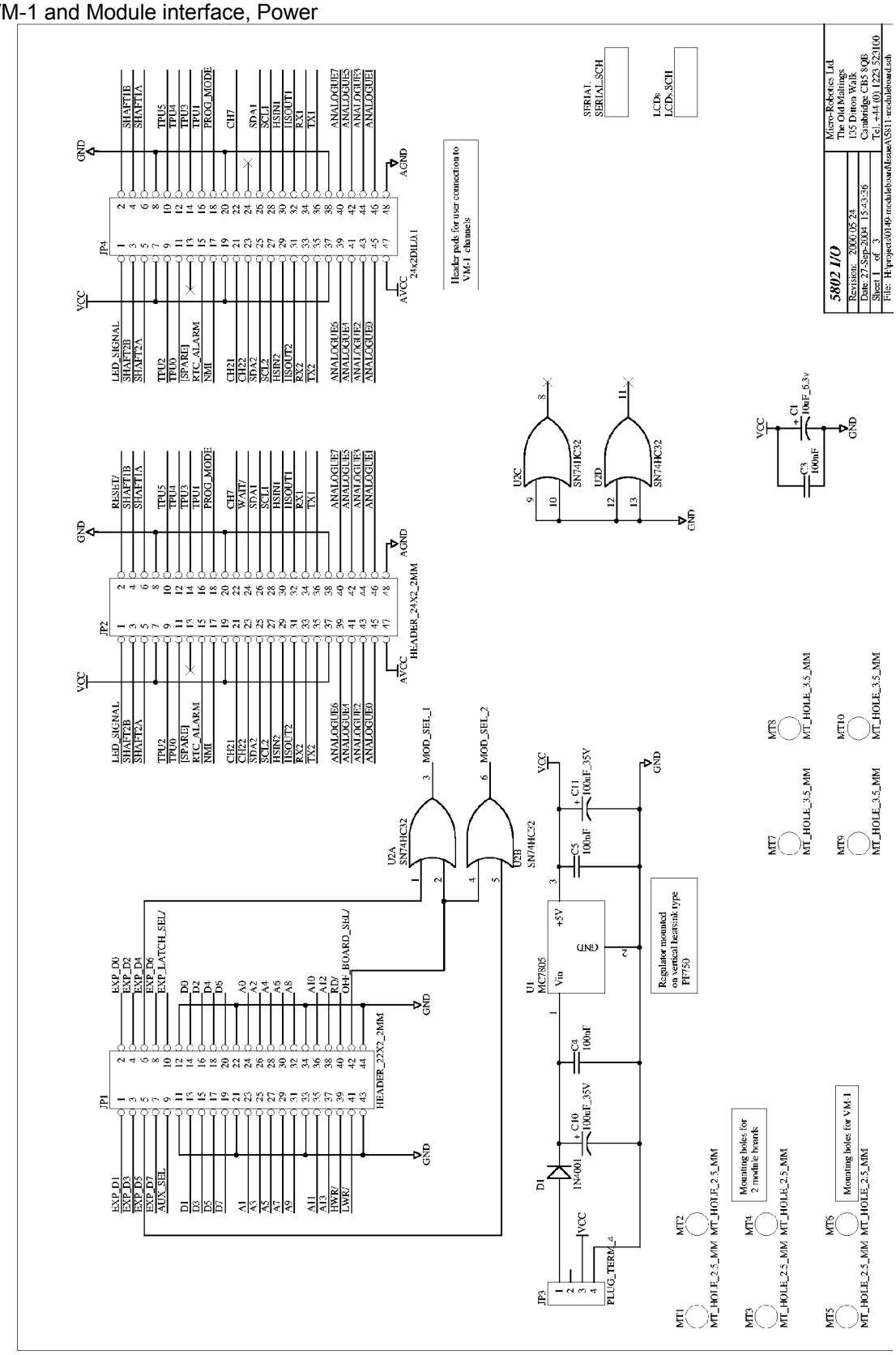

Serial Schematic

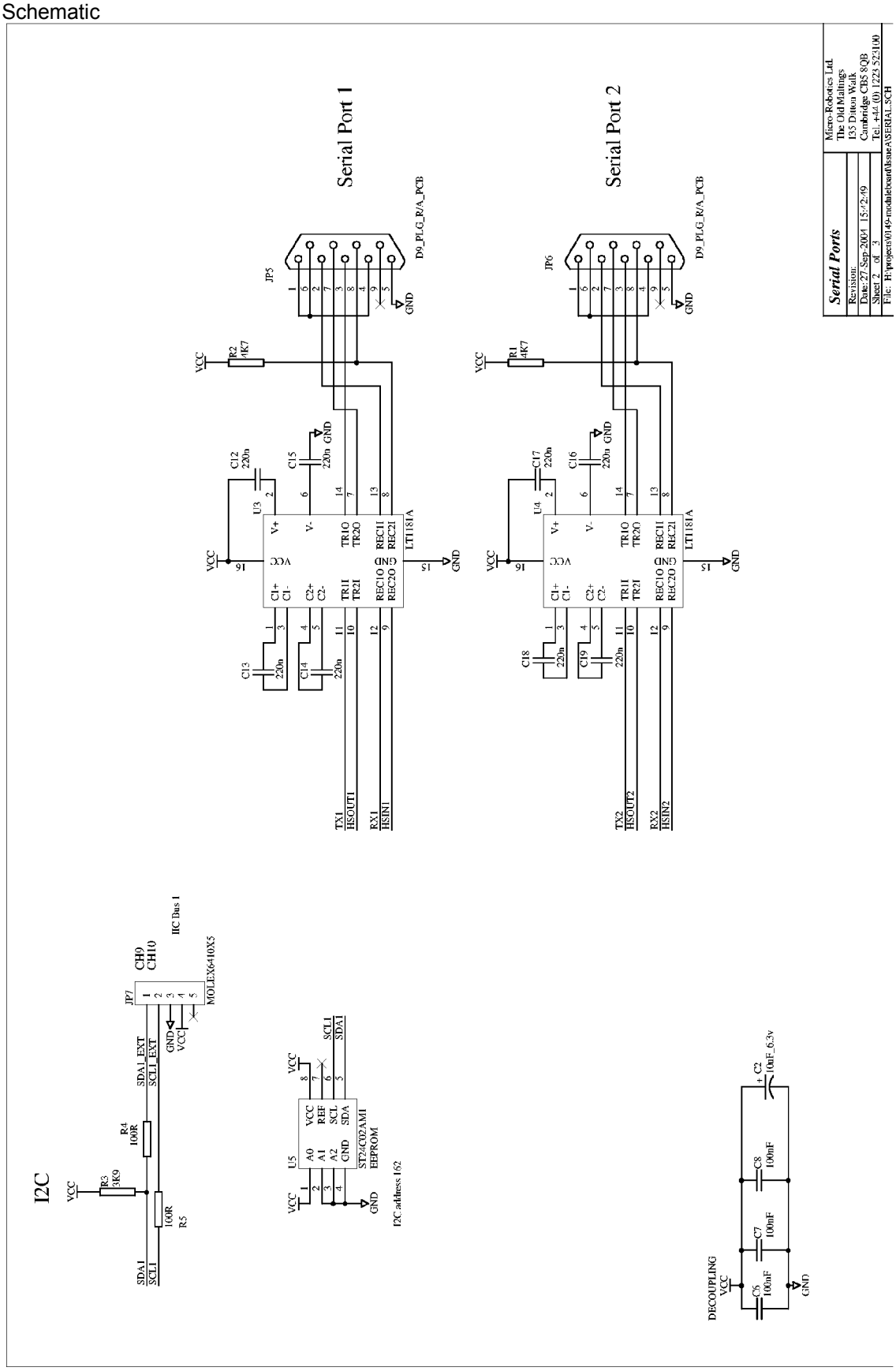

LCD connection schematic

