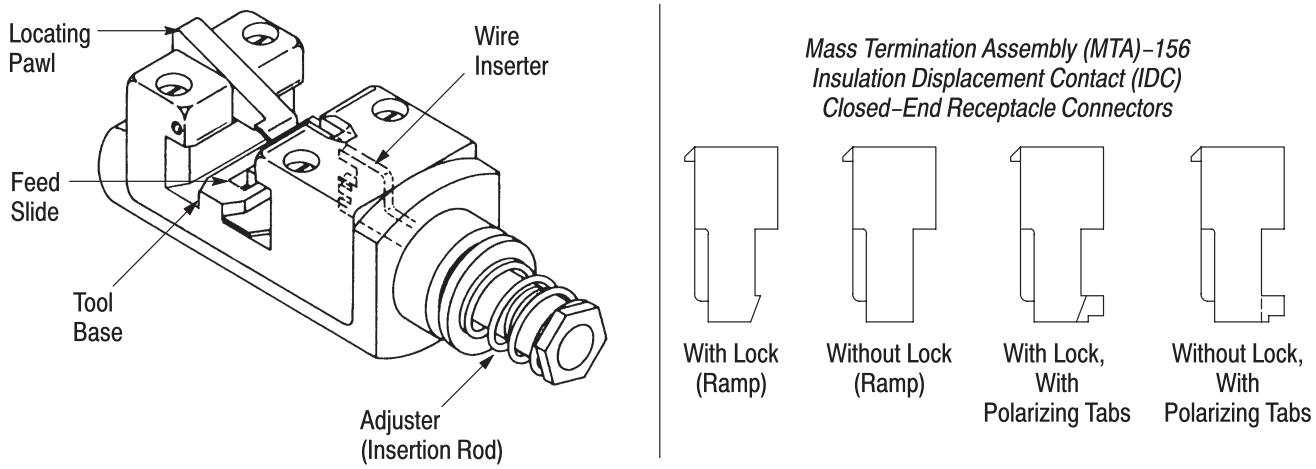

Figure 1

1. INTRODUCTION

Terminating Head 58247–3 (shown in Figure 1) is designed to terminate discrete wire, jacketed cable, or ribbon cable in MTA–156 IDC closed–end receptacle connectors with or without lock (ramp) and with or without polarizing tabs. Slotted contacts for insulation displacement termination are pre–assembled on 3.96–mm [.156–in.] centerlines in each color–coded housing for a specific wire size.

The head must be installed in Pistol Grip Manual Handle Assembly 58074–1 or Pistol Grip Pneumatic Handle Assembly 58075–1. For head installation and removal, refer to Instruction Sheet 408–6790 for the manual handle assembly and 408–6789 for the pneumatic handle assembly.

For detailed connector description and application requirements, refer to Application Specification 114–1020.

Read these and all referenced instructions thoroughly before using the head.

NOTE

All numerical values in this instruction sheet are in metric units [with U.S. customary units in brackets]. Dimensions are in millimeters [and inches]. Figures are not drawn to scale.

Reasons for reissue of this instruction sheet are provided in Section 8, REVISION SUMMARY.

2. DESCRIPTION

The head serves as a guide and support for the connector during termination. Features of the head (shown in Figure 1) and their function are as follows.

Wire Inserter — forces the wire into the two slotted beams of the contact. Note that it provides support for the contact beams when applying insertion force on the wire.

Adjuster (Insertion Rod) — is a piston for the wire inserter and regulates wire inserter travel.

Feed Slide — automatically positions the connector after each termination.

Locating Pawl (or Anti–Backup Pawl) — aligns the connector for insertion, and retains it during termination.

3. SETUP AND TEST INSPECTION

The adjuster (insertion rod) is preset for wire sizes 26 through 18 AWG. If the wire is being inserted too deeply or not deeply enough inside the contact, it may be necessary to adjust the depth of the wire inserter, or in addition, if the pneumatic handle assembly is being used, it may be necessary to adjust the air pressure. Proceed as follows:

3.1. Setup

1. Determine the wire size, and select the appropriate color–coded connector from Figure 2.

WIRE SIZE (AWG)	CONNECTOR COLOR CODE
26	Blue
24	Natural
22	Red
20	Yellow
18	Orange

Figure 2

©2008 Tyco Electronics Corporation, Harrisburg, PA
All International Rights Reserved
TE logo and Tyco Electronics are trademarks.
*Trademark. Other products, logos, and company names used are the property of their respective owners.

2. Using a small knife, cut off the wire retainers (strain relief) of the connector. This will provide a clear view for inspecting the connector for a properly terminated wire in the contact. See Figure 3.

CAUTION

Wire retainers are removed in a connector for testing only. DO NOT use such connectors for production application.

3. Make a test termination according to Steps 1 through 6 of Section 5, TERMINATING PROCEDURE.

4. Push the connector out of the right side of the head.

5. Check that the wire insertion depth is within the dimension given in Figure 3.

NOTE

To obtain the wire insertion depth, measure from the front of the contact beam to the center of the wire as shown in Figure 3 – or – measure from the front of the contact beam to the back of the wire and subtract the wire diameter divided by 2.

If it is not, proceed as follows:

For the manual handle assembly, refer to Section 4, WIRE INSERTION DEPTH ADJUSTMENT.

For the pneumatic handle assembly, if the wire is inserted too deeply (more than the required wire insertion depth), refer to Section 4, WIRE INSERTION DEPTH ADJUSTMENT. If the wire is not inserted deeply enough (less than the required wire insertion depth), increase the air pressure by 69 kPa [10 psi]. Repeat the termination procedure and check the wire insertion depth. Continue in this manner until either the required insertion depth is obtained or the air pressure is set to 483 kPa [70 psi]. If the required insertion depth is NOT reached at 483 kPa [70 psi], return the air pressure to 276 kPa [40 psi], and refer to Section 4.

6. Inspect the termination according to Paragraph 3.2.

3.2. Termination Inspection (Refer to Figure 3)

NOTE

Refer to 114-1020 for detailed explanation of the termination inspection requirements.

1 — The required wire insertion depth is within the dimension given in Figure 3 (refer to Step 5 of Paragraph 3.1 for measurement).

2 — The end of the wire extends past the contact beam by at least 1.52 mm [.060 in.].

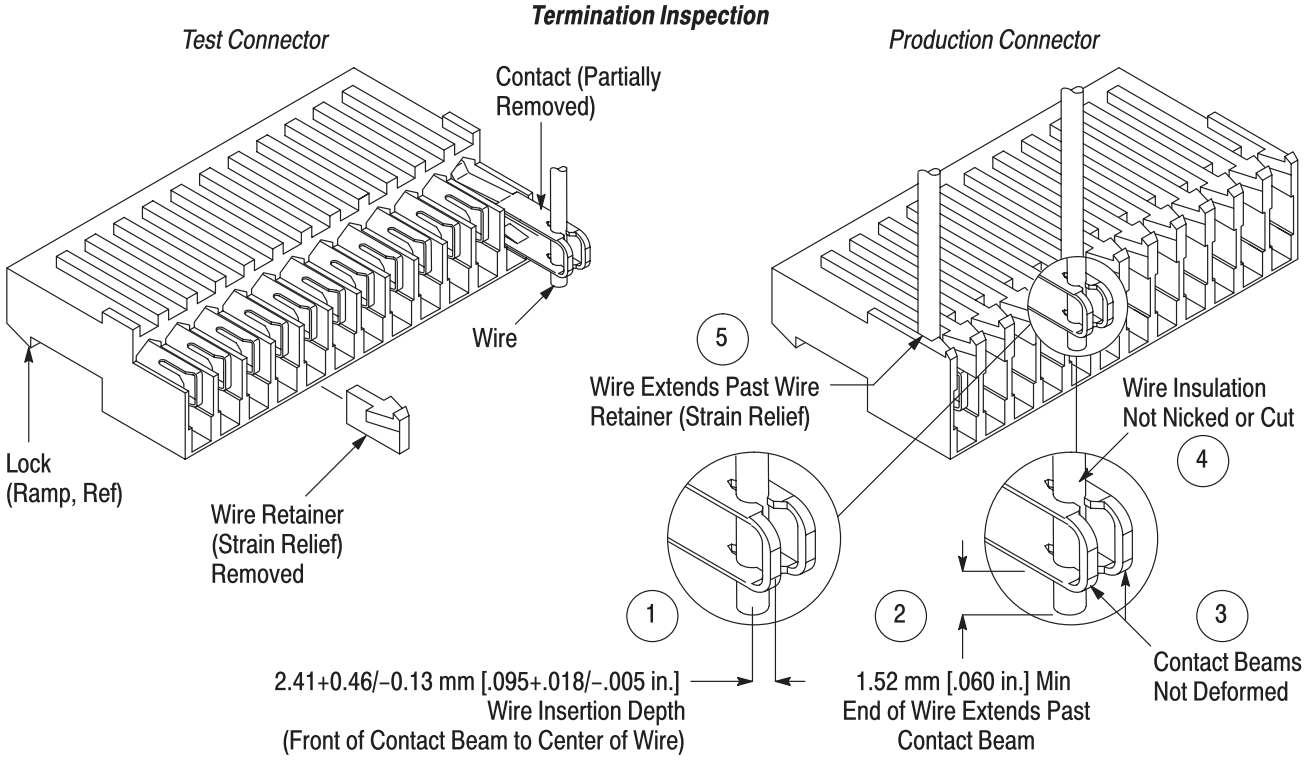

Figure 3

3 — The contact beams are NOT deformed. If damage is apparent, replace the contacts in accordance with the instructions packaged with the connector.

4 — The wire insulation is NOT nicked or cut in any area other than the two contact slots.

5 — The wire extends past the wire retainer (strain relief) of the connector.

4. WIRE INSERTION DEPTH ADJUSTMENT (See Figure 4)

1. Remove the head from the handle assembly.

2. If the wire is inserted too deeply (more than the required wire insertion depth), reduce the wire insertion depth by turning the adjuster $^1/_6$ of a revolution *clockwise*. The wire insertion depth will be reduced by approximately 0.20 mm [.008 in.].

CAUTION

If the wire is bottomed in the contact slot, this indicates that the adjuster is set to the maximum wire insertion depth — DO NOT turn the adjuster counterclockwise; otherwise damage to the head may occur.

If the wire is not inserted deeply enough (less than the required wire insertion depth), increase the wire insertion depth by turning the adjuster $^1/_6$ of a revolution *counterclockwise*. The wire insertion depth will be increased by approximately 0.20 mm [.008 in.].

CAUTION

When turning the adjuster counterclockwise, make sure to check the wire insertion depth after EACH $^1/_6$ revolution. If the adjuster is set past the maximum setting, damage to the head may occur.

Wire Insertion Depth Adjustment

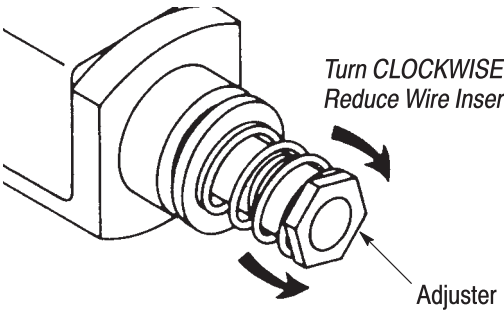

Note: $^1/_6$ Revolution Equals 0.20 mm [.008 in.] Adjustment

Figure 4

5. TERMINATING PROCEDURE

5.1. Discrete Wire and Jacketed Cable

1. There is no preparation required for discrete wire. Prepare jacketed cable according to Figure 5.

2. Insert the connector into the left side of the head. Refer to Figure 6.

Jacketed Cable Preparation

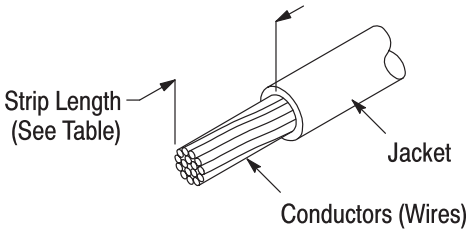

Ribbon Cable Preparation

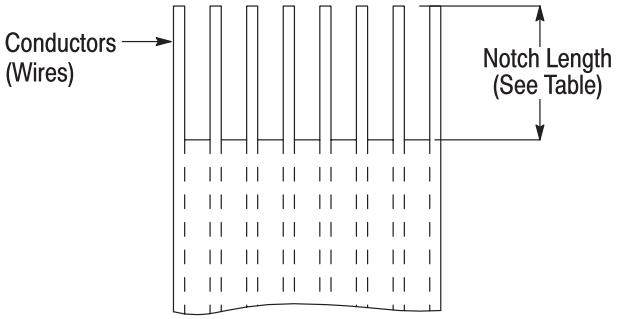

Note: Not to Scale

CABLE PREPARATION		
DISCRETE WIRE	**JACKETED CABLE●**	**RIBBON CABLE**
No Preparation	50.8 mm [2.0 in.] (Typ)	9.7 mm [.38 in.]

● Large cable sizes, applications requiring large connectors, or unique applications may require a larger strip length.

Figure 5

3. Align the contact to be terminated with the wire inserter of the head (shown in Figure 1). Make sure that the locating pawl rests between the connector index ribs.

4. Insert the unstripped wire into the funnel area between the contact and the wire inserter until it bottoms on the tool base. See Figure 6.

5. Squeeze the cam handle (manual) or depress the trigger (pneumatic) of the handle assembly, and hold it until the ratchet releases (manual) or the wire inserter bottoms (pneumatic).

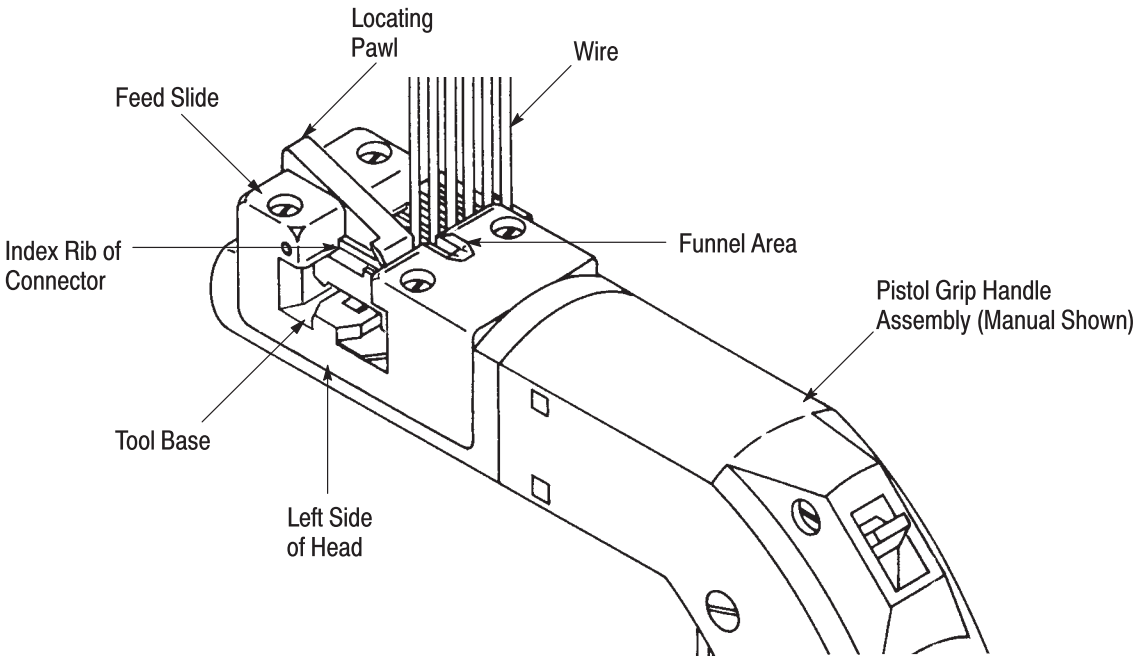

Figure 6

6. Release the cam handle or trigger. The wire inserter will retract and the feed slide will automatically advance the connector to the next contact position.

NOTE

The locating pawl will move up and down as the connector is automatically advanced through the head. However, if movement is obstructed, or if desired, the locating pawl can be depressed and the connector moved manually out of the RIGHT side of the head.

7. Repeat Steps 2 through 6 until all contacts have been terminated.

8. Inspect each termination according to Paragraph 3.2.

5.2. Ribbon Cable

1. Prepare ribbon cable according to Figure 5.

2. Insert the connector into the left side of the head. Refer to Figure 6.

3. Align the contact to be terminated with the wire inserter of the head (shown in Figure 1). Make sure that the locating pawl rests between the connector index ribs.

4. Position the ribbon cable directly above the connector so that the first wire is between the first position of the connector and the funnel area of the head. Insert the ribbon cable into the connector until the first wire bottoms on the tool base. Make sure that the cable is fully seated by checking that the ends of the notched wires of the trailing end of the cable are against the back edge of the connector. This position must be maintained for every wire after the termination begins.

CAUTION

The ribbon cable must be held in place during the entire termination to ensure that the proper wire depth is maintained. The additional drag caused by the ribbon cable rubbing against the guide area may cause the connector to not fully feed to the next full position. Additional care must be taken to make sure that the locating pawl is properly located in the contact slot of the connector before cycling the tool.

5. Squeeze the cam handle (manual) or depress the trigger (pneumatic) of the handle assembly, and hold it until the ratchet releases (manual) or the wire inserter bottoms (pneumatic).

6. Release the cam handle or trigger. The wire inserter will retract and the feed slide will automatically advance the connector to the next contact position.

NOTE

The locating pawl will move up and down as the connector is automatically advanced through the head. However, if movement is obstructed, or if desired, the locating pawl can be depressed and the connector moved manually out of the head.

7. Repeat Steps 2 through 6 until all contacts have been terminated.

8. Inspect each termination according to Paragraph 3.2.

6. MAINTENANCE AND INSPECTION

6.1. Daily Maintenance

1. Remove dust, moisture, and other contaminants with a clean, soft brush or lint–free cloth. DO NOT use objects that could damage the head.

2. Make sure that all components are in place and properly secured.

3. Actuate the tool to make sure that the mechanisms inside the head function smoothly.

6.2. Periodic Maintenance

1. Remove any accumulated film with a suitable cleaning agent that will not affect plastic.

2. Make sure all components are in place and properly secured.

3. Check for chipped, cracked, worn, or broken areas on the head. If damage is evident, repair or replace the head.

6.3. Inspection

Regular inspections should be performed by quality control personnel with a record of quality control inspections remaining with the personnel responsible for the head. One inspection per month is the recommended frequency; however, operator training and skill, amount of use, working conditions, and established company standards are all factors to be considered in establishing inspection frequency.

7. REPLACEMENT AND REPAIR

Customer–replaceable parts are listed in Figure 7. A complete inventory should be stocked and controlled to prevent lost time when replacement of parts is necessary. Parts other than those listed should be replaced by Tyco Electronics Corporation to ensure quality and reliability. Order replacement parts through your representative, or call 1–800–526–5142, or send a facsimile of your purchase order to 717–986–7605, or write to:

CUSTOMER SERVICE (038–035)
TYCO ELECTRONICS CORPORATION
PO BOX 3608
HARRISBURG PA 17105–3608

For customer repair service, call 1–800–526–5136.

8. REVISION SUMMARY

Revisions to this instruction sheet include:

- Updated document to corporate requirements
- Removed connector part numbers
- Removed Quad connectors
- Modified Figure 3
- Modified Step 5 of Paragraph 3.1 and Point 1 of Paragraph 3.2
- Modified Step 2 of Section 4
- Replaced address for customer repair service with phone number

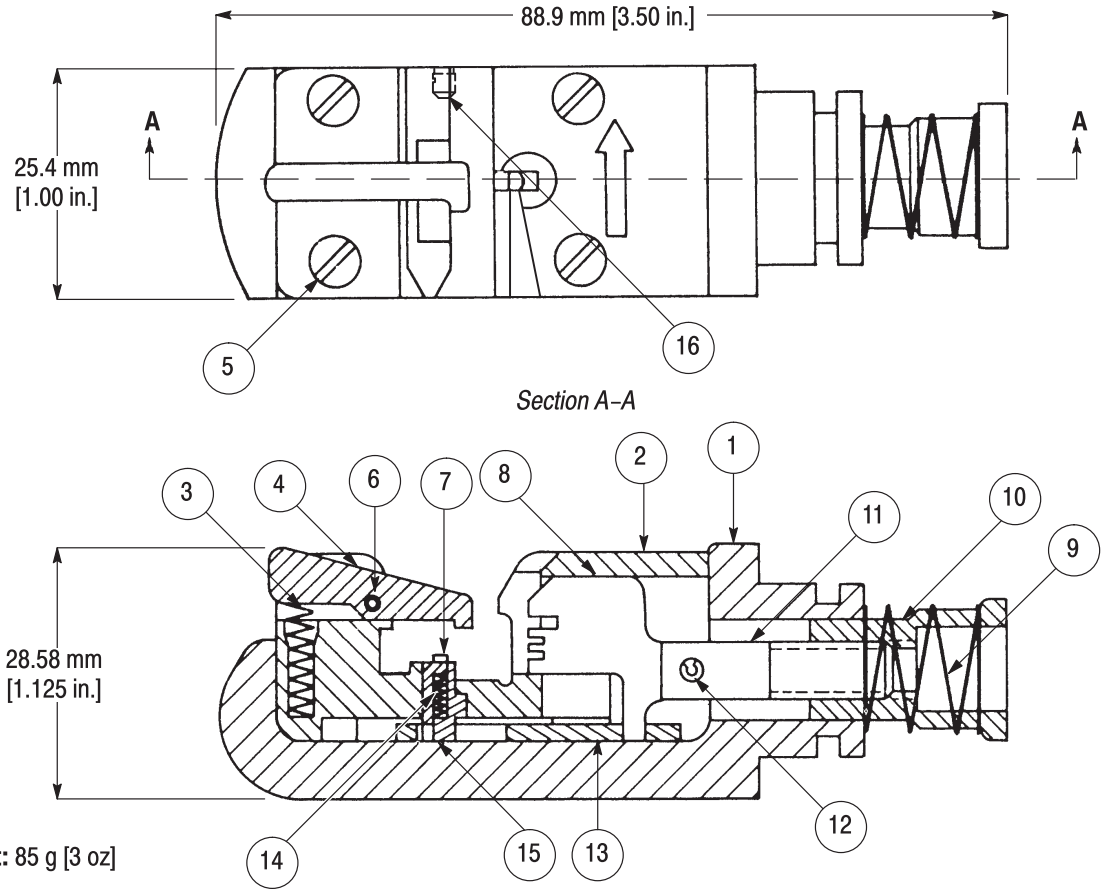

Weight: 85 g [3 oz]

REPLACEMENT PARTS

ITEM	PART NUMBER	DESCRIPTION	QTY PER HEAD
1	312150-1	HEAD, Finished	1
2	224392-1	HOUSING, Insert	1
3	6-22278-5	SPRING, Compression	1
4	312147-1	PAWL, Locating	1
5	4-22430-8	SCREW, Machine (4-40 × .875 in. L)	4
6	21041-7	PIN, Spiral Spring	1
7	312192-1	PAWL, Feed	1
8	312154-1	INSERTER, Wire	1
9	22488-5	SPRING, Compression	1
10	312149-1	ADJUSTER, Rod Insertion	1
11	312148-1	ROD, Inserter	1
12	3-21028-2	PIN, Slotted Spring	1
13	312153-1	CAM, Traverse Slide	1
14	1-23147-2	SPRING, Compression	1
15	312151-1	SLIDE, Feed	1
16	1-21010-9	SET SCREW, Socket (4-40 × .125 in. L)	1

Figure 7