# PCB Support

561-LMSP125, 561-LMSP250, 561-LMSP312, 561-LMSP375, 561-LMSP437, 561-LMSP500, 561-LMSP625, 561-LMSP750, 561-LMSP875, 561-LMSP1000, 561-TMSP125, 561-TMSP250, 561-TMSP312, 561-TMSP375, 561-TMSP437, 561-TMSP500, 561-TMSP625, 561-TMSP750, 561-TMSP875, 561-TMSP1000

***Date Last Revised: 05-19-10***

**LMSP**

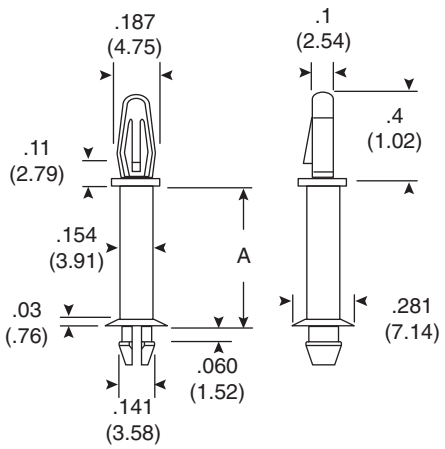


**TMSP**

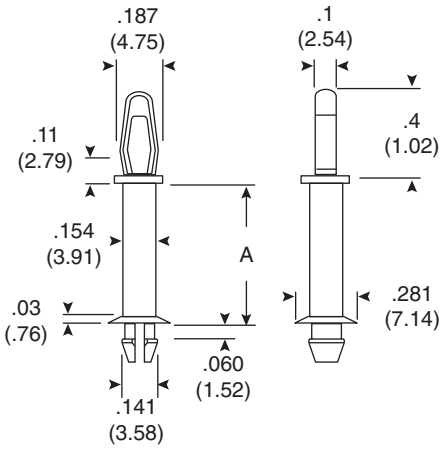


**Dimensions: in. (mm)**

- Spring end fits .156" hole
- Lock or tension end fits .125" hole
- Panel thickness 1/16"

## SPECIFICATIONS

| Mouser Num. | Description | A in. (mm) | Mouser Num. | Description | A in. (mm) |
|---|---|---|---|---|---|
| 561-LMSP125 | LMSP125 | .125 (3.175) | 561-TMSP125 | TMSP125 | .125 (3.175) |
| 561-LMSP250 | LMSP250 | .25 (6.35) | 561-TMSP250 | TMSP250 | .25 (6.35) |
| 561-LMSP312 | LMSP312 | .312 (7.93) | 561-TMSP312 | TMSP312 | .312 (7.93) |
| 561-LMSP375 | LMSP375 | .375 (9.53) | 561-TMSP375 | TMSP375 | .375 (9.53) |
| 561-LMSP437 | LMSP437 | .437 (11.1) | 561-TMSP437 | TMSP437 | .437 (11.1) |
| 561-LMSP500 | LMSP500 | .5 (12.7) | 561-TMSP500 | TMSP500 | .5 (12.7) |
| 561-LMSP625 | LMSP625 | .625 (15.88) | 561-TMSP625 | TMSP625 | .625 (15.88) |
| 561-LMSP750 | LMSP750 | .75 (19.05) | 561-TMSP750 | TMSP750 | .75 (19.05) |
| 561-LMSP875 | LMSP875 | .875 (22.25) | 561-TMSP875 | TMSP875 | .875 (22.25) |
| 561-LMSP1000 | LMSP1000 | 1 (25.4) | 561-TMSP1000 | TMSP1000 | 1 (25.4) |

***Available from Mouser Electronics***
***1-800-346-6873 / www.mouser.com***

EPD-200450

Specifications are subject to change without notice. No liability or warranty implied by this information. Environmental compliance based on producer documentation.

# Mouser Electronics

Authorized Distributor

Click to View Pricing, Inventory, Delivery & Lifecycle Information:

Eagle Plastic Devices:

561-TMSP500 561-LMSP875 561-TMSP625 561-LMSP1000 561-LMSP750 561-LMSP125 561-TMSP1000 561-LMSP437 561-LMSP250 561-LMSP375 561-TMSP125 561-LMSP625 561-LMSP312 561-LMSP500 561-TMSP312 561-TMSP375 561-TMSP250 561-TMSP750 561-TMSP875 561-TMSP437