557-110
EMI/RFI D-Subminiature Solid Backshell for Individual and Overall Shielding
with Strain-Relief

557 T 110 M 2 F 02 C

- Basic Part No.
- Cable Entry Style: T = Top, S = Side, E = End
- Basic Part Number
- Finish Symbol (Page 3)
- Shell Size (Table I)
- F = Strain Relief, G = Gland Nut
- Cable Entry Dash No. (Table II)
- C = Supplied With Retainer Clips and Jackscrews, Omit for None

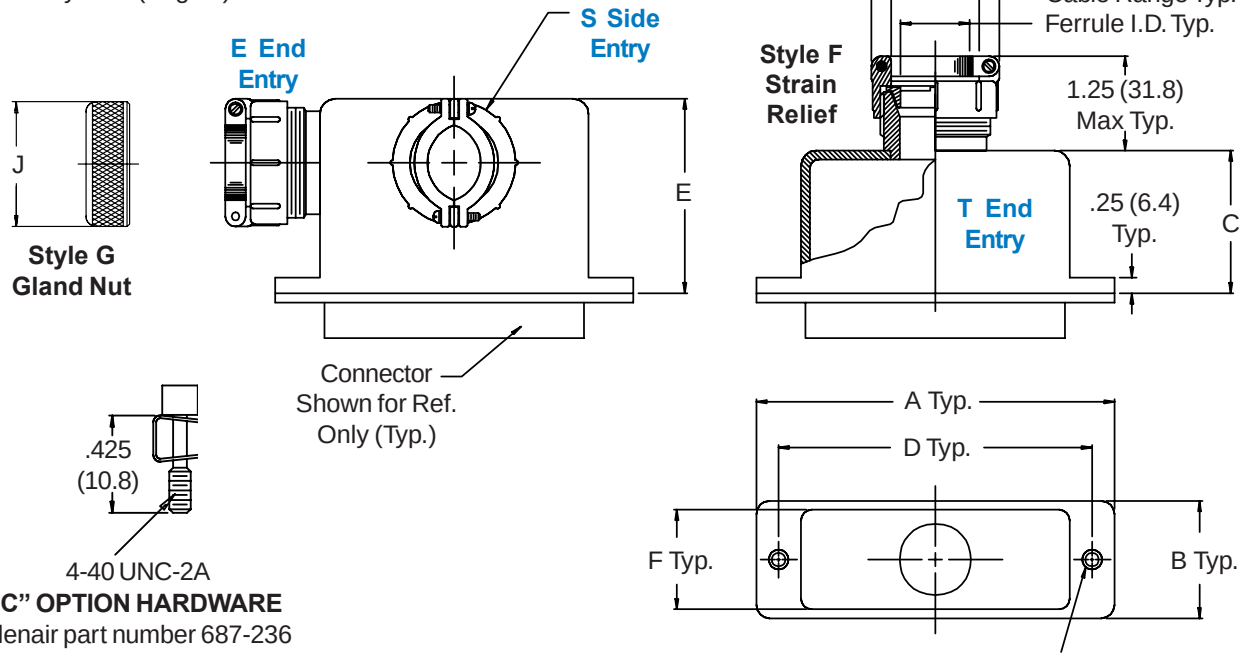

"C" OPTION HARDWARE
Glenair part number 687-236

Tapped for 4-40 UNC-2B (2 places). When C option is ordered, two cleared holes are supplied.

Metric dimensions (mm) are indicated in parentheses.

TABLE II: CABLE ENTRY

Dash No.	H Max		J Max		Cable Range Min		Cable Range Max		Ferrule I.D.	
02	.968	(24.6)	.781	(19.8)	.125	(3.2)	.250	(6.4)	.125	(3.2)
03	1.046	(26.6)	.906	(23.0)	.250	(6.4)	.375	(9.5)	.250	(6.4)
04	1.156	(29.4)	1.031	(26.2)	.312	(7.9)	.500	(12.7)	.375	(9.5)
05	1.218	(30.9)	1.156	(29.4)	.375	(9.5)	.625	(15.9)	.500	(12.7)

TABLE I: CONNECTOR/SHELL INTERFACE & BACKSHELL DIMENSIONS

Shell Size	Com'l Shell Size Ref	A		B		C		D ±.005	D (.1)	E		F		Max Dash No. Table II
1	E/09	1.25	(31.8)	.53	(13.5)	.75	(19.1)	.984	(25.0)	1.88	(47.8)	.43	(10.9)	04
2	A/15	1.58	(40.1)	.53	(13.5)	.75	(19.1)	1.312	(33.3)	1.88	(47.8)	.43	(10.9)	04
3	B/25	2.13	(54.1)	.53	(13.5)	1.00	(25.4)	1.852	(47.0)	1.88	(47.8)	.43	(10.9)	04
4	C/37	2.77	(70.4)	.53	(13.5)	1.00	(25.4)	2.500	(63.5)	1.88	(47.8)	.43	(10.9)	04
5	D/50	2.68	(68.1)	.66	(16.8)	1.25	(31.8)	2.406	(61.1)	2.13	(54.1)	.56	(14.2)	04
6	F/104	2.77	(70.4)	.73	(18.5)	1.25	(31.8)	2.500	(63.5)	2.13	(54.1)	.63	(16.0)	05

© 2004 Glenair, Inc.
CAGE Code 06324
Printed in U.S.A.

GLENAIR, INC. • 1211 AIR WAY • GLENDALE, CA 91201-2497 • 818-247-6000 • FAX 818-500-9912
www.glenair.com
E-Mail: sales@glenair.com