55505 Hall Effect Flange Mount Geartooth Speed Sensor

RoHS

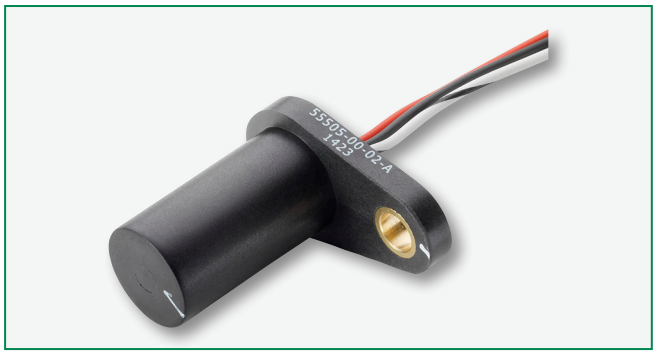

Description

The 55505 is a robust flange mounting hall effect sensor primarily for geartooth speed sensing. Protected against severe and automotive environments. It is capable of switching up to 27Vdc and 20mA and available as three-wire (voltage output) version. It's case design encorporates brass mounting bush. It is ideally suited to wheel, transmission and camshaft speed sensing, geartooth sensor, rotary encoders, industrial, commercial, and automotive applications.

Features

- Ferrous target speed sensing
- Internal circuit protection
- Protection against severe and automotive environments
- Self adjusting magnetic range
- Automotive grade circuit protection
- High speed operation
- Short circuit and reverse voltage protection
- On board 10-bit A/D convertor

Benefits

- No chopper delay
- Immune to target run out
- Rotational alignment to target not critical

Applications

- Wheel, transmission and camshaft speed sensing
- Geartooth sensor
- Rotary encoders
- Industrial
- Commercial
- Automotive

Dimensions

Dimensions in mm (inch)

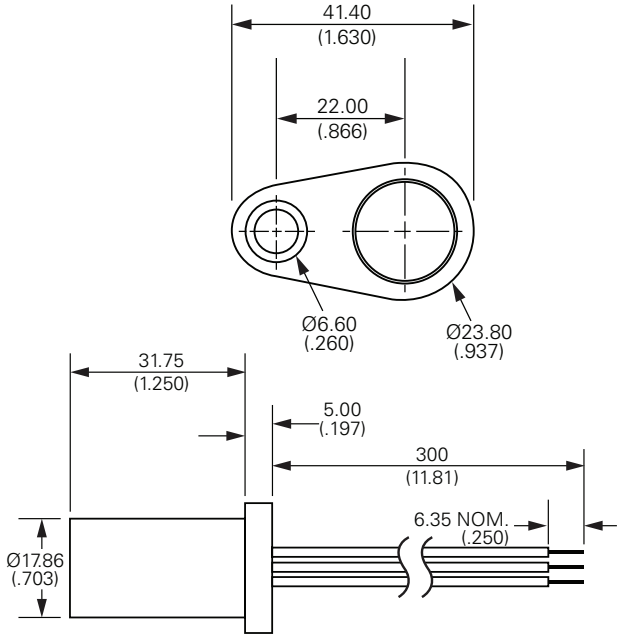

Block Diagram

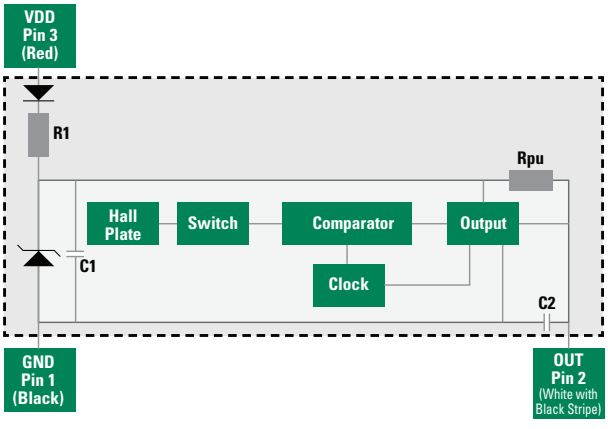

Application Example (Geartooth Sensor)

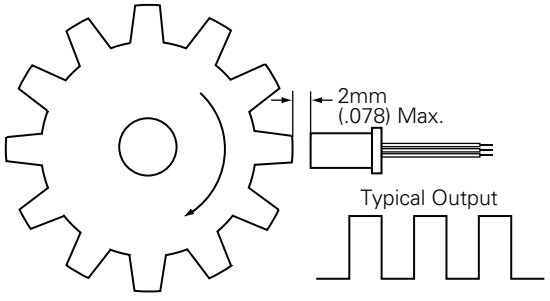

© 2015 Littelfuse Revised: 10/16/15
Specifications are subject to change without notice.

55505 Hall Effect Flange Mount Geartooth Speed Sensor

Electrical Ratings

Hall Type			Digital Switch 3-Wire (Voltage Output)
Supply Voltage [1]	Operate Overvoltage Protection Reverse Voltage Protection	Vdc Vdc - max. Vdc - max.	4.75 to 24 27 -25
Output High Voltage		Vdc - min.	VDD -2 (-2 sinking output with internal pull-up)
Output Low Voltage		Vdc - max.	0.6 @ 20mA
Output Current (continuously on) Current Consumption Current Consumption		mA - max. mA - max. mA - max.	20 1 10.5
Current Consumption		mA - min. mA - max.	1 10.5
Switching Speed		KHz-max.	15
Temperature	Operating	°C	-40 to +125

Note:
1. As long as Tj (Junction Temperature) is not exceeded.

Cable Length Options

Cable Type: 20AWG 7/28 TXL 125C SAE J1128	
Select Option	**Cable Length mm (inch)**
02	300 (11.81)

Termination Options

Select Option	Description	
A	Tinned Leads	
B	Deutsch DTM04-3P	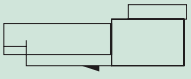
C	Molex MX 150	

Part Numbering System

55505 - 00 - 02 - X

Series

Cable Length
02

Termination
A, B, or C

Packaging

Packaging Option	Packaging Specification	Quantity	Quantity & Packaging Code	Taping Width
Bulk	Bulk	500	N/A	N/A

© 2015 Littelfuse Revised: 10/16/15
Specifications are subject to change without notice.