molex
one company > a world of innovation

This document was generated on 06/02/2010

PLEASE CHECK WWW.MOLEX.COM FOR LATEST PART INFORMATION

Part Number: 0554820239
Status: Active
Overview: mini_mi_ii
Description: 1.25mm (.049") Pitch Mini Mi II™ Wire-to-Wire Adapter, without Panel Mount Clip, 2 Circuits, Lead-free

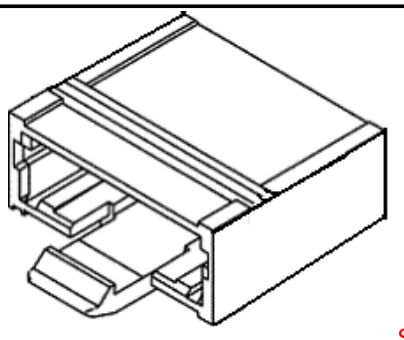

Series image - Reference only

Documents:

3D Model
Drawing (PDF)
Product Specification PS-55482-006 (PDF)
RoHS Certificate of Compliance (PDF)

General

Product Family	Accessories
Series	55482
Component Type	Adapter
Overview	mini_mi_ii
Product Name	Mini Mi II™

Physical

Circuits (Loaded)	2
Color - Resin	Natural
Gender	Male
Material - Metal	Brass
Material - Plating Mating	Tin
Material - Plating Termination	Tin
Material - Resin	Nylon
Number of Rows	1
Packaging Type	Bag
Plating min: Mating (µin)	40
Plating min: Mating (µm)	1.00
Plating min: Termination (µin)	40
Plating min: Termination (µm)	1.00
Temperature Range - Operating	-20°C to +80°C

Electrical

Current - Maximum per Contact	1.5A

Material Info

Reference - Drawing Numbers

Product Specification	PS-55482-006
Sales Drawing	SD-55482-005

EU RoHS
ELV and RoHS Compliant
REACH SVHC
Not Reviewed
Halogen-Free Status
Not Reviewed

China RoHS

Need more information on product environmental compliance?

Email productcompliance@molex.com
For a multiple part number RoHS Certificate of Compliance, click here

Please visit the Contact Us section for any non-product compliance questions.

Search Parts in this Series
55482Series

Use With
54596 IDT Housing

This document was generated on 06/02/2010

PLEASE CHECK WWW.MOLEX.COM FOR LATEST PART INFORMATION

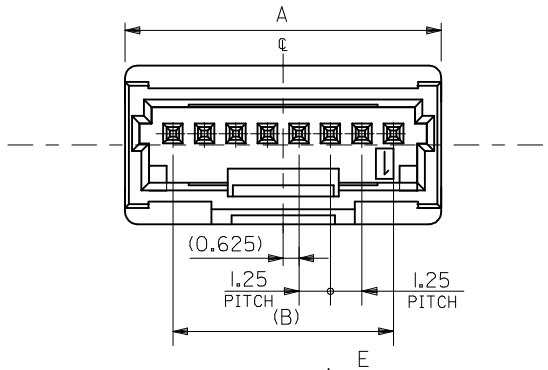

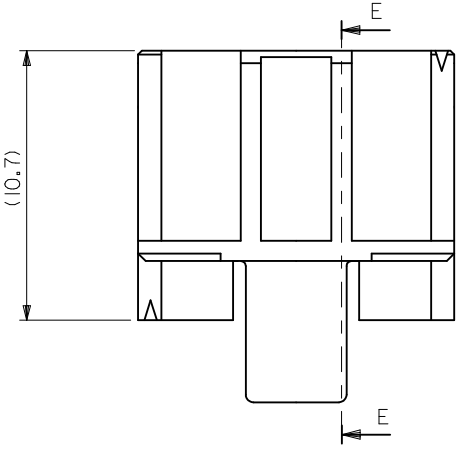

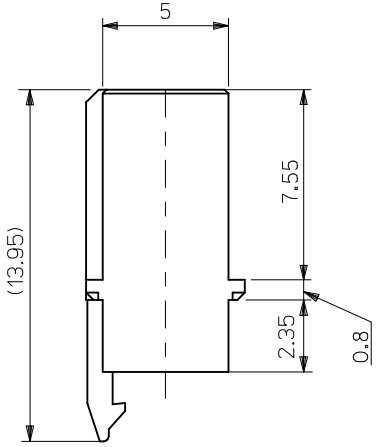

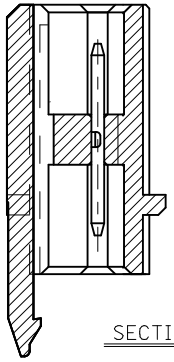

SECTION E-E

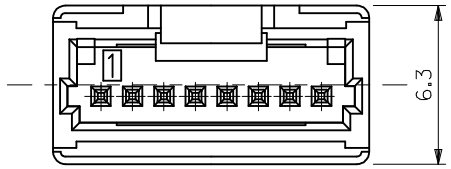

MATE中継コネクタ挿入方向
MATED & MOUNTED CONNECTOR

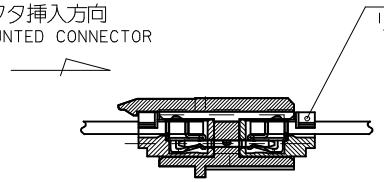

嵌合状態図
MATED & MOUNTED CONNECTOR

23.75	27.55	55482-2039	20
22.5	26.3	55482-1939	19
21.25	25.05	55482-1839	18
20	23.8	55482-1739	17
18.75	22.55	55482-1639	16
17.5	21.3	55482-1539	15
16.25	20.05	55482-1439	14
15	18.8	55482-1339	13
13.75	17.55	55482-1239	12
12.5	16.3	55482-1139	11
11.25	15.05	55482-1039	10
10	13.8	55482-0939	9
8.75	12.55	55482-0839	8
7.5	11.3	55482-0739	7
6.25	10.05	55482-0639	6
5	8.8	55482-0539	5
3.75	7.55	55482-0439	4
2.5	6.3	55482-0339	3
1.25	5.05	55482-0239	2
B	A	TRAY	CIRCUITS

注 記 NOTES

1.材 質 MATERIAL
ウエハー：ポリアミド、UL94-V0、ナチュラル色
WAFER：PA、UL94-V0、COLOR NATURAL
ピン：黄銅、銅下地 錫メッキ
PIN:BRASS, PRE-TINNED

2.嵌合相手
MATE WITH
リセプタクルアセンブリ：54596 シリーズ
REC.ASS'Y:54596 SERIES
ピン：リン青銅、錫メッキ
PIN:PHOSPHOR BRONZE, PRE-TINNED

3.本製品は 55482-**30 の鉛フリー品である。
THIS PRODUCT IS LEAD FREE OF 55482-**30.

4.ELV AND RoHS COMPLIANT.

55482-**39	MODEL NO.	ORDER NO. オーダー番号

REVISED
EC NO: J2010-0170 2009/07/27
DRWN:TKON 2009/07/28
CH'KD:KASAKAWA
APPR:NUKITA 2009/07/29
DESCRIPTION
A
REV

GENERAL TOLERANCES (UNLESS SPECIFIED)

10 UNDER	±0.2
10 OVER 30 UNDER	±0.25
30 OVER	±0.3
ANGULAR	±3 °

DRAFT WHERE APPLICABLE MUST REMAIN WITHIN DIMENSIONS

DIMENSION STYLE	MM ONLY
SCALE	5:1
DESIGN UNITS	METRIC
	THIRD ANGLE PROJECTION
DRAWN BY	T.UENO
DATE	2004/06/07
CHECKED BY	M.SASAO
DATE	2004/06/07
APPROVED BY	M.SASAO
DATE	2004/06/07
MATERIAL NO.	SEE TABLE
TITLE	MINI MI2 1-ROW RELAY WAFER ASSY -LEAD FREE-
	MOLEX INCORPORATED
DOCUMENT NO.	SD-55482-005
SHEET NO.	1 OF 1
SIZE	A3

THIS DRAWING CONTAINS INFORMATION THAT IS PROPRIETARY TO MOLEX INCORPORATED AND SHOULD NOT BE USED WITHOUT WRITTEN PERMISSION