This document was generated on 04/02/2010

PLEASE CHECK WWW.MOLEX.COM FOR LATEST PART INFORMATION

Part Number: 0553474065
Status: Active
Description: HMC™ Rectangular Industrial Male Housing, Single-Module, 40 Circuits, Type B Polarization

Documents:
Drawing (PDF)
RoHS Certificate of Compliance (PDF)
Product Specification PS-54478-001 (PDF)

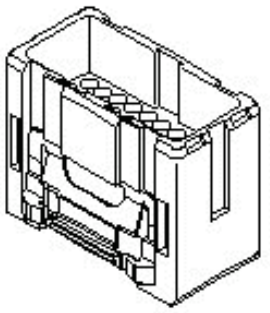

Series image - Reference only

EU RoHS
ELV and RoHS Compliant
REACH SVHC
Not Reviewed
Halogen-Free Status
Not Reviewed

China RoHS

Need more information on product environmental compliance?

Email productcompliance@molex.com
For a multiple part number RoHS Certificate of Compliance, click here

Please visit the Contact Us section for any non-product compliance questions.

Search Parts in this Series
55347Series

Mates With
54478-4065 housing

Use With
58783-0011 panel-mount bracket, 55124 terminal, 58782-0011 hood bracket

Agency Certification

CSA	LR19980
UL	E29179

General

Product Family	I/O Connectors
Series	55347
Application	Panel-Mount, Wire-to-Wire
Component Type	Housing
Product Name	HMC™
Type	N/A

Physical

Boot Color	N/A
Circuits (Loaded)	N/A
Circuits (maximum)	40
Durability (mating cycles max)	50
Flammability	94V-0
Gender	Male
Lock to Mating Part	Yes
Material - Plating Mating	n/a
Number of Rows	4
Orientation	Vertical
PCB Locator	No
Packaging Type	Bag
Panel Mount	N/A
Pitch - Mating Interface (in)	0.177 In
Pitch - Mating Interface (mm)	4.50 mm
Pitch - Term. Interface (in)	0.177 In
Pitch - Term. Interface (mm)	4.50 mm
Polarized to Mating Part	No
Polarized to PCB	N/A
Ports	1
Surface Mount Compatible (SMC)	No
Temperature Range - Operating	-40°C to +125°C
Termination Interface: Style	N/A
Waterproof / Dustproof	Yes
Waterproof / Dustproof Type	IP65

Electrical

Current - Maximum per Contact	10A
Shielded	No
Voltage - Maximum	300V DC

Material Info

Reference - Drawing Numbers

Product Specification	PS-54478-001

Sales Drawing SD-55347-4065

This document was generated on 04/02/2010

PLEASE CHECK WWW.MOLEX.COM FOR LATEST PART INFORMATION

DWG. NO. SD-55347-4065

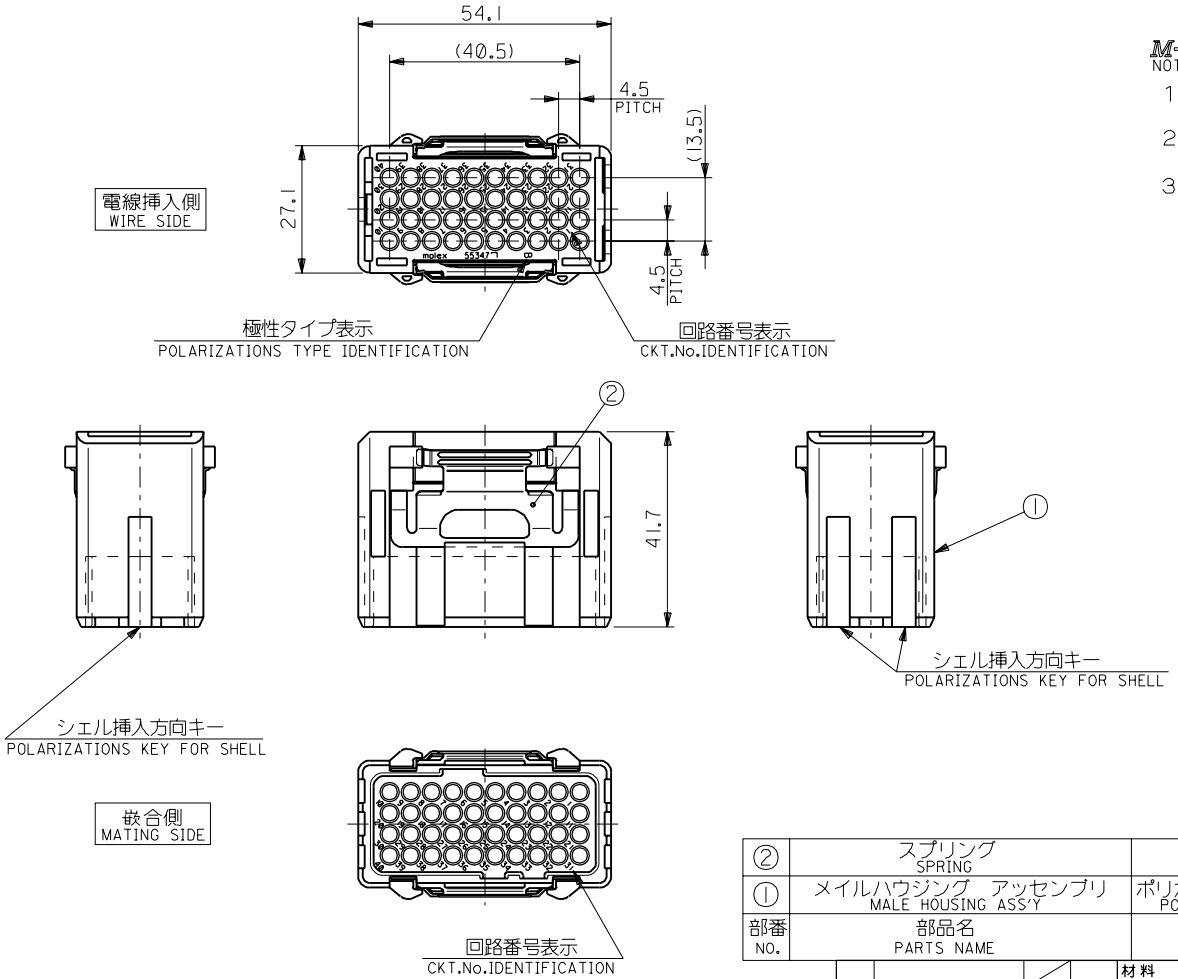

M+
NOTES

1. 嵌合相手 : 54478-4065
   MATES WITH : 54478-4065
2. 適用端子 : 55124-4***
   APPLICABLE PIN CONTACT : 55124-4***
3. 適用シェルアッセンブリ
   APPLICABLE SHELL ASS'Y
   プラグ : 58782-0011
   PLUG : 58782-0011
   リセプタクル : 58783-0011
   RECEPTACLE : 58783-0011

部番 NO.	部品名 PARTS NAME	材質 MATERIAL	個数 QUAN.	製品番号 ENG. NO.	極数 CKTS.
②	スプリング SPRING	ステンレス STAINLESS STEEL	2	55347-4065	40
①	メイルハウジング アッセンブリ MALE HOUSING ASS'Y	ポリカーボネイト UL94V-0 グレー POLYCARBONATE UL94V-0 GRAY	1		

一般公差 GENERAL TOLERANCES	
角度 ANGLE	±3°
30 以上 OVER	±0.3
10 以上 OVER 30 未満 UNDER	±0.25
10 未満 UNDER	±0.2

記号 LTR	変更内容 REVISION RECORD	DR. CHK.	日付 DATE
0	◇*◇◇ RELEASED (JD90683)	J.M Y.I	'98/11/06

材料 MATERIAL 表参照 SEE TABLE

仕上げ FINISH —//—

適用電線範囲 WIRE RANGE —//—

被覆外径 INS. RANGE —//—

DRAWN BY J. Mayazawa

CHK'D BY Y. Oto

APP'D BY H. Yerange

尺度 SCALE 1-1

molex MOLEX-JAPAN CO.,LTD. 日本モレックス株式会社

REVISE ONLY ON CAD SYSTEM

TITLE 名称
ROBOT CONN.
MALE HS'G ASS'Y
(嵌合極性タイプ B)
(MATING POLARIZATIONS TYPE B)

DWG. NO. SD-55347-4065 REV 0

S553474B.DGN

:MM DIMENSIONS IN METRIC DO NOT SCALE DRAWING

THIS DRAWING CONTAINS INFORMATION THAT IS PROPRIETARY TO MOLEX(JAPAN) AND SHOULD NOT BE USED WITHOUT WRITTEN PERMISSION
本図面は日本モレックス（株）の所有する情報を含むもので当社の許可なく複製を禁止する。

EN-01C(032)MXJ-32