National Semiconductor

June 1989

5442A/DM5442A/DM7442A BCD to Decimal Decoders

General Description

These BCD-to-decimal decoders consist of eight inverters and ten, four-input NAND gates. The inverters are connected in pairs to make BCD input data available for decoding by the NAND gates. Full decoding of input logic ensures that all outputs remain off for all invalid (10–15) input conditions.

Features

- Diode clamped inputs
- Also for application as 4-line-to-16-line decoders; 3-line-to-8-line decoders
- All outputs are high for invalid input conditions
- Typical power dissipation 140 mW
- Typical propagation delay 17 ns
- Alternate Military/Aerospace device (5442A) is available. Contact a National Semiconductor Sales Office/ Distributor for specifications.

Connection Diagram

Dual-In-Line Package

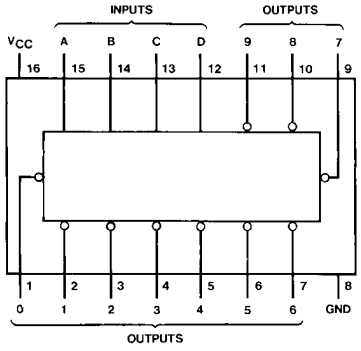

TL/F/6516–1

Order Number 5442ADMQB, 5442AFMQB, DM5442AJ, DM5442AW or DM7442AN
See NS Package Number J16A, N16E or W16A

Function Table

No.	BCD Input				Decimal Output									
	D	C	B	A	0	1	2	3	4	5	6	7	8	9
0	L	L	L	L	L	H	H	H	H	H	H	H	H	H
1	L	L	L	H	H	L	H	H	H	H	H	H	H	H
2	L	L	H	L	H	H	L	H	H	H	H	H	H	H
3	L	L	H	H	H	H	H	L	H	H	H	H	H	H
4	L	H	L	L	H	H	H	H	L	H	H	H	H	H
5	L	H	L	H	H	H	H	H	H	L	H	H	H	H
6	L	H	H	L	H	H	H	H	H	H	L	H	H	H
7	L	H	H	H	H	H	H	H	H	H	H	L	H	H
8	H	L	L	L	H	H	H	H	H	H	H	H	L	H
9	H	L	L	H	H	H	H	H	H	H	H	H	H	L
INVALID	H	L	H	L	H	H	H	H	H	H	H	H	H	H
	H	L	H	H	H	H	H	H	H	H	H	H	H	H
	H	H	L	L	H	H	H	H	H	H	H	H	H	H
	H	H	L	H	H	H	H	H	H	H	H	H	H	H
	H	H	H	L	H	H	H	H	H	H	H	H	H	H
	H	H	H	H	H	H	H	H	H	H	H	H	H	H

H = High Level
L = Low Level

©1995 National Semiconductor Corporation RRD-B30M105/Printed in U. S. A.

Absolute Maximum Ratings (Note)

If Military/Aerospace specified devices are required, please contact the National Semiconductor Sales Office/Distributors for availability and specifications.

Supply Voltage	7V
Input Voltage	5.5V
Operating Free Air Temperature Range	
DM54 and 54	−55°C to +125°C
DM74	0°C to +70°C
Storage Temperature Range	−65°C to +150°C

Note: *The "Absolute Maximum Ratings" are those values beyond which the safety of the device cannot be guaranteed. The device should not be operated at these limits. The parametric values defined in the "Electrical Characteristics" table are not guaranteed at the absolute maximum ratings. The "Recommended Operating Conditions" table will define the conditions for actual device operation.*

Recommended Operating Conditions

Symbol	Parameter	DM5442A			DM7442A			Units
		Min	Nom	Max	Min	Nom	Max	
V_{CC}	Supply Voltage	4.5	5	5.5	4.75	5	5.25	V
V_{IH}	High Level Input Voltage	2			2			V
V_{IL}	Low Level Input Voltage			0.8			0.8	V
I_{OH}	High Level Output Current			−0.8			−0.8	mA
I_{OL}	Low Level Output Current			16			16	mA
T_A	Free Air Operating Temperature	−55		125	0		70	°C

Electrical Characteristics over recommended operating free air temperature range (unless otherwise noted)

Symbol	Parameter	Conditions		Min	Typ (Note 1)	Max	Units
V_I	Input Clamp Voltage	V_{CC} = Min, I_I = −12 mA				−1.5	V
V_{OH}	High Level Output Voltage	V_{CC} = Min, I_{OH} = Max V_{IL} = Max, V_{IH} = Min		2.4	3.4		V
V_{OL}	Low Level Output Voltage	V_{CC} = Min, I_{OL} = Max V_{IH} = Min, V_{IL} = Max			0.2	0.4	V
I_I	Input Current @ Max Input Voltage	V_{CC} = Max, V_I = 5.5V				1	mA
I_{IH}	High Level Input Current	V_{CC} = Max, V_I = 2.4V				40	μA
I_{IL}	Low Level Input Current	V_{CC} = Max, V_I = 0.4V				−1.6	mA
I_{OS}	Short Circuit Output Current	V_{CC} = Max (Note 2)	DM54	−20		−55	mA
			DM74	−18		−55	
I_{CC}	Supply Current	V_{CC} = Max (Note 3)	DM54		28	41	mA
			DM74		28	56	

Note 1: All typicals are at V_{CC} = 5V, T_A = 25°C.

Note 2: Not more than one output should be shorted at a time.

Note 3: I_{CC} is measured with all outputs open and all inputs grounded.

Switching Characteristics at $V_{CC} = 5V$ and $T_A = 25°C$ (See Section 1 for Test Waveforms and Output Load)

Symbol	Parameter	Conditions	Min	Max	Units
t_{PHL}	Propagation Delay Time High to Low Level Output from A, B, C or D through 2 Levels of Logic	$C_L = 15$ pF, $R_L = 400\Omega$		25	ns
t_{PHL}	Propagation Delay Time High to Low Level Output from A, B, C or D through 3 Levels of Logic			30	ns
t_{PLH}	Propagation Delay Time Low to High Level Output from A, B, C or D through 2 Levels of Logic			25	ns
t_{PLH}	Propagation Delay Time Low to High Level Output from A, B, C or D through 3 Levels of Logic			30	ns

Logic Diagram

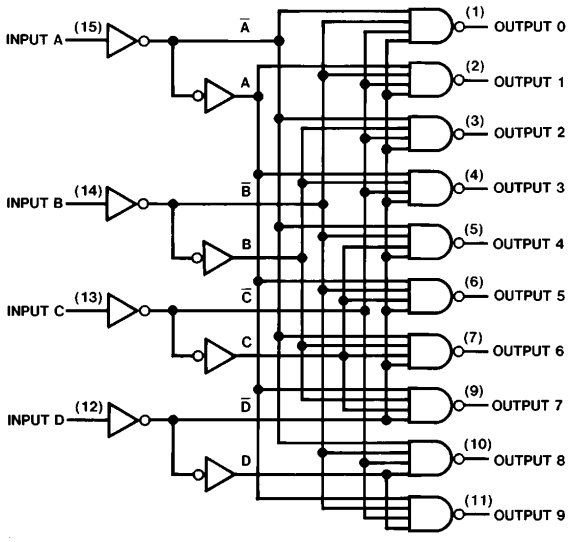

TI/F/6516–2

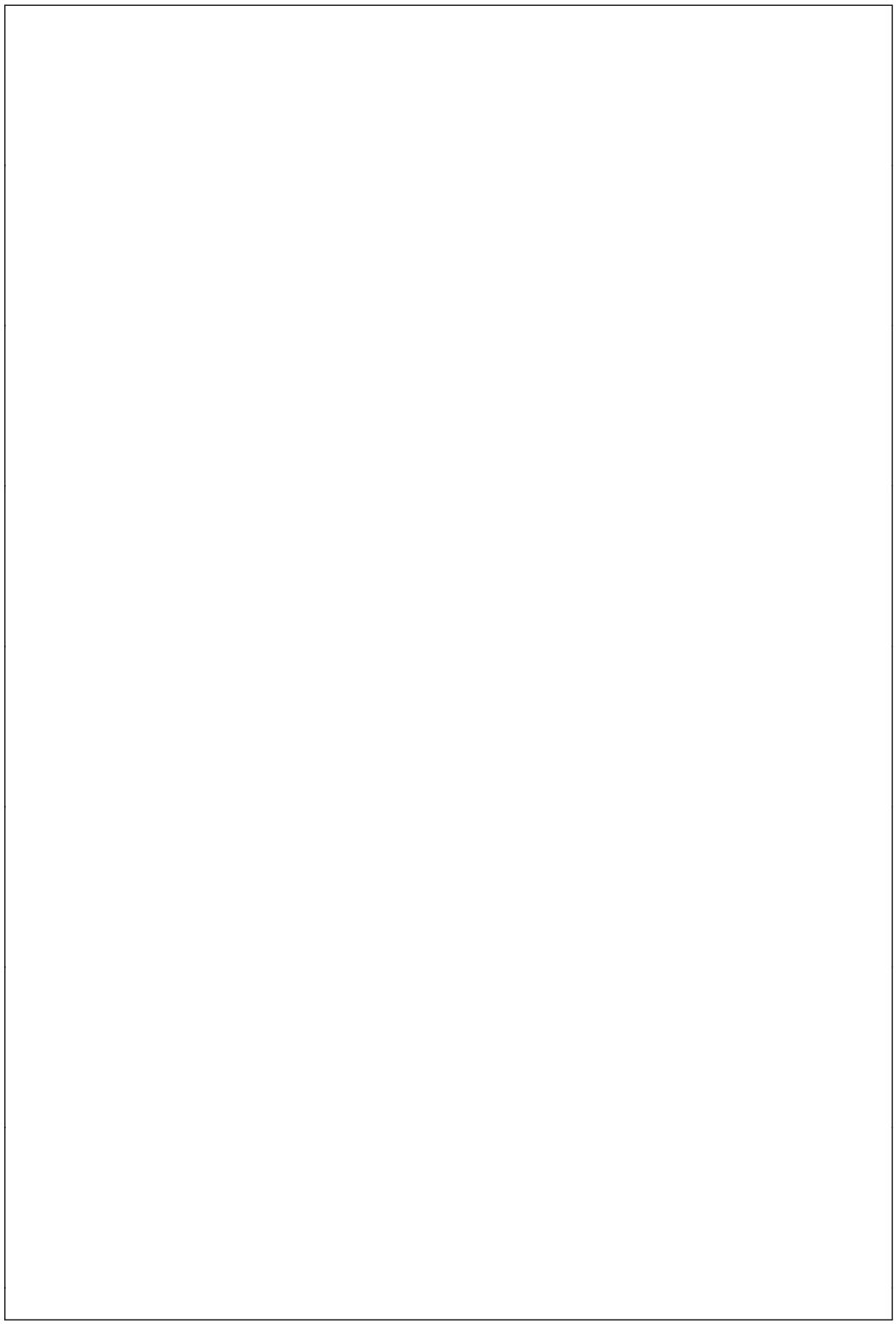

Physical Dimensions inches (millimeters)

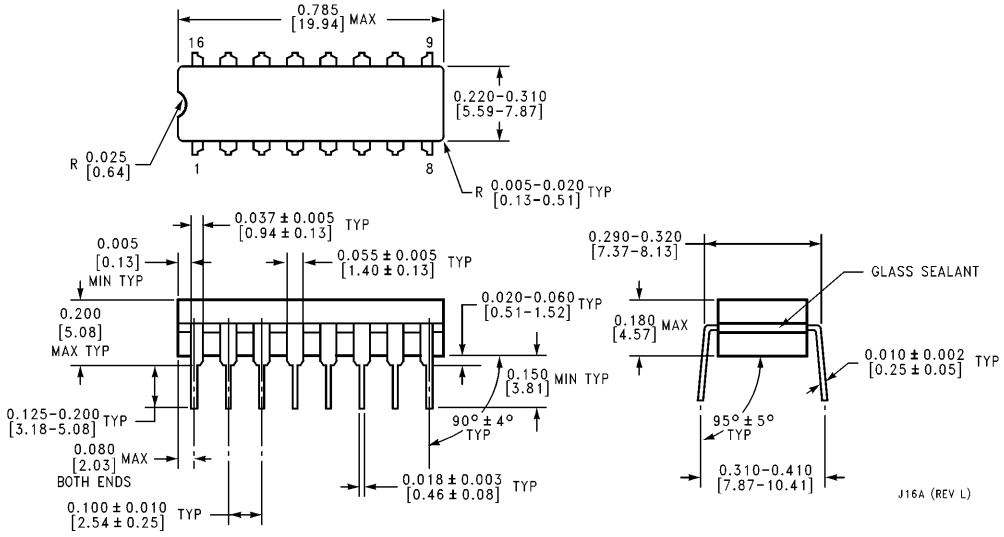

16-Lead Ceramic Dual-In-Line Package (J)
Order Number 5442ADMQB or DM5442AJ
NS Package Number J16A

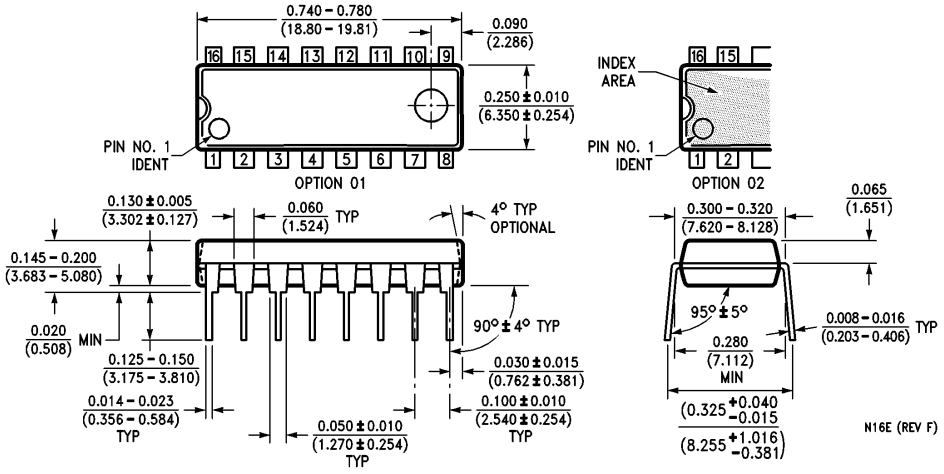

16-Lead Molded Dual-In-Line Package (N)
Order Number DM7442AN
NS Package Number N16E

Physical Dimensions inches (millimeters) (Continued)

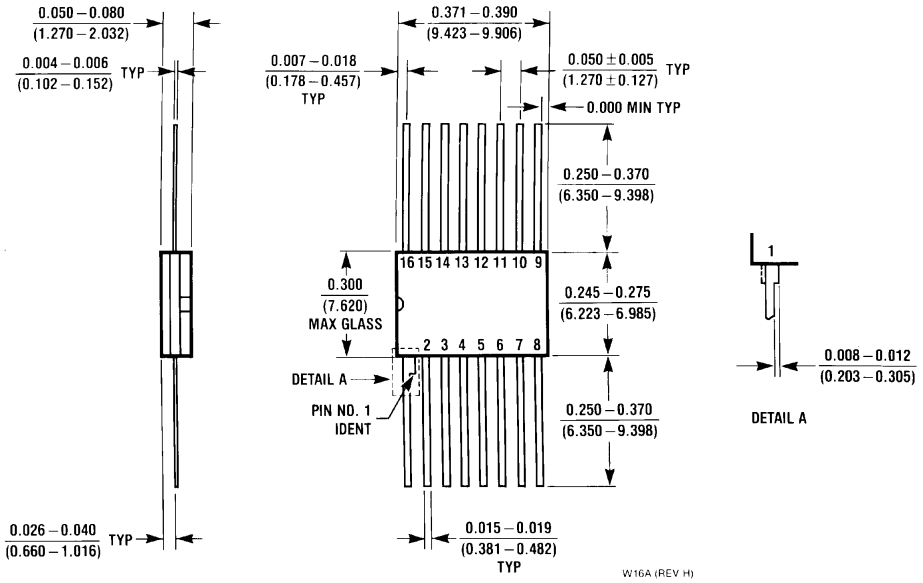

16-Lead Ceramic Flat Package (W)
Order Number 5442AFMQB or DM5442AW
NS Package Number W16A

LIFE SUPPORT POLICY

NATIONAL'S PRODUCTS ARE NOT AUTHORIZED FOR USE AS CRITICAL COMPONENTS IN LIFE SUPPORT DEVICES OR SYSTEMS WITHOUT THE EXPRESS WRITTEN APPROVAL OF THE PRESIDENT OF NATIONAL SEMICONDUCTOR CORPORATION. As used herein:

1. Life support devices or systems are devices or systems which, (a) are intended for surgical implant into the body, or (b) support or sustain life, and whose failure to perform, when properly used in accordance with instructions for use provided in the labeling, can be reasonably expected to result in a significant injury to the user.
2. A critical component is any component of a life support device or system whose failure to perform can be reasonably expected to cause the failure of the life support device or system, or to affect its safety or effectiveness.

National Semiconductor Corporation
1111 West Bardin Road
Arlington, TX 76017
Tel: 1(800) 272-9959
Fax: 1(800) 737-7018

National Semiconductor Europe
Fax: (+49) 0-180-530 85 86
Email: cnjwge@tevm2.nsc.com
Deutsch Tel: (+49) 0-180-530 85 85
English Tel: (+49) 0-180-532 78 32
Français Tel: (+49) 0-180-532 93 58
Italiano Tel: (+49) 0-180-534 16 80

National Semiconductor Hong Kong Ltd.
13th Floor, Straight Block,
Ocean Centre, 5 Canton Rd.
Tsimshatsui, Kowloon
Hong Kong
Tel: (852) 2737-1600
Fax: (852) 2736-9960

National Semiconductor Japan Ltd.
Tel: 81-043-299-2309
Fax: 81-043-299-2408

National does not assume any responsibility for use of any circuitry described, no circuit patent licenses are implied and National reserves the right at any time without notice to change said circuitry and specifications.