DWG. NO. SD-54363-038

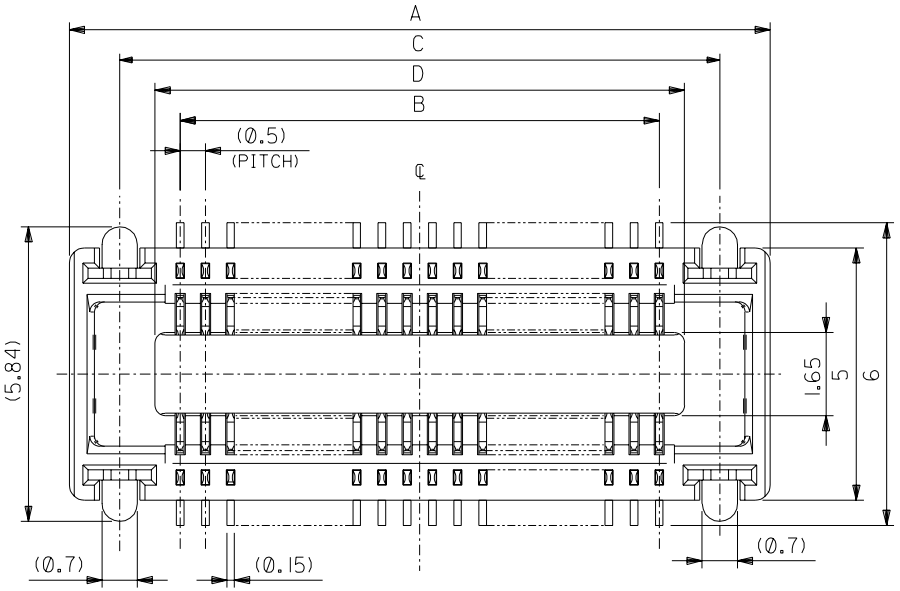

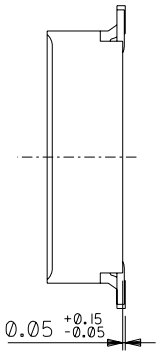

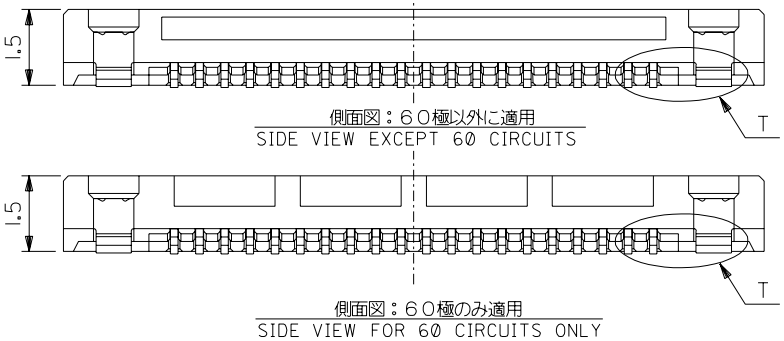

側面図：６０極以外に適用
SIDE VIEW EXCEPT 60 CIRCUITS

側面図：６０極のみ適用
SIDE VIEW FOR 60 CIRCUITS ONLY

注記
NOTES:

1. 材質
   MATERIAL
   ハウジング：ＬＣＰ（液晶ポリマー）、ガラス充填、黒色、ＵＬ９４Ｖ－０
   HOUSING:LCP(LIQUID CRYSTAL POLYMER),GLASS FILLED,BLACK,UL94V-0
   ターミナル：銅合金（ｔ＝０．１５）
   TERMINAL:COPPER ALLOY(t=0.15)
   ネイル：銅合金（ｔ＝０．２）
   NAIL:COPPER ALLOY(t=0.2)
2. メッキ仕様
   PLATING
   ターミナル
   TERMIAL
   接点部：金メッキ　０．２５マイクロメートル以上
   CONTACT AREA:GOLD 0.25 MICROMETER MINIMUM
   半田付け部：金メッキ　０．４マイクロメートル以下
   SOLDER TAIL AREA:GOLD 0.4 MICROMETER MAXMUM
   下地メッキ：ニッケルメッキ　１．５マイクロメートル以上
   UNDER PLATING:NICKEL 1.5 MICROMETER MINIMUM
   ネイル
   NAIL
   錫メッキ　３．０マイクロメートル以上
   Sn 3.0 MICROMETER MINIMUM
   下地メッキ：ニッケルメッキ　１．０マイクロメートル以上
   UNDER PLATING:Ni 1.0 MICROMETER MINIMUM
3. テール平坦度は、０．０８ミリメートル以下。テールとネイルを併せた平坦度は、０．１ミリメートル以下。
   TAIL COPLANARITY TO BE 0.08 MAXMUM. TAILS AND NAILS COPLANARITY TO BE 0.1 MAXMUM.
4. 嵌合相手：５５２９９－＊＊＊＊（Ｈ＝3mm）
   ：５５２０１－＊＊＊＊、５５６５０－＊＊＊＊（Ｈ＝2mm）
   MATED CONN.:55299-****(H=3mm)
   :55201-****,55650-****(H=2mm)
5. この製品は５４３６３－＊＊０１，（エンボス梱包品　５４３６３－＊＊０８）の鉛フリー品です。
   THIS PRODUCTE IS 'LEAD FREE' OF 54363-**01,
   (EMBOSSED TAPE PKG 54363-**08)

D	C	B	A	エンボス梱包品 EMBOSSED TAPE PACKAGING	製品番号 MATERIAL NO.	極数 CIRCUITS	量産対応 AVAILABLE
40.5	41.9	39.5	43.9	54363-1678	54363-1671	160	—
35.5	36.9	34.5	38.9	54363-1478	54363-1471	140	○
30.5	31.9	29.5	33.9	54363-1278	54363-1271	120	○
28	29.4	27	31.4	54363-1178	54363-1171	110	○
25.5	26.9	24.5	28.9	54363-1078	54363-1071	100	○
23	24.4	22	26.4	54363-0978	54363-0971	90	—
20.5	21.9	19.5	23.9	54363-0878	54363-0871	80	○
18	19.4	17	21.4	54363-0778	54363-0771	70	○
15.5	16.9	14.5	18.9	54363-0678	54363-0671	60	○
13	14.4	12	16.4	54363-0578	54363-0571	50	○
10.5	11.9	9.5	13.9	54363-0478	54363-0471	40	○
8	9.4	7	11.4	54363-0378	54363-0371	30	○
5.5	6.9	4.5	8.9	54363-0278	54363-0271	20	○

DO NOT SCALE DRAWING

	EC NO.	DRWN:	CH'K:	APPR:	DESCRIPTION	REV
					REVISED ECNNO. J2004-2225 '04/02/02 DRWN: A.IDA CH'K: H.TAKASE APPR:J.MIYAZAWA/YO.ITO	A
					RELEASED ECNNO. J2004-1740 '04/01/06 DRWN: A.IDA CH'K: H.TAKASE APPR:J.MIYAZAWA/YO.ITO	Ø

MATERIAL 材料: 注記参照 SEE NOTES
FINISH 仕上げ: 注記参照 SEE NOTES
WIRE RANGE 適用電線範囲: —#—
INS. RANGE 被覆外径: —#—

GENERAL TOLERANCES: (UNLESS SPECIFIED) 一般公差

10 UNDER 未満	±0.2
10 OVER 以上 30 UNDER 未満	±0.25
30 OVER 以上	±0.3
ANGLE 角度	±3°

SCALE 10-1 | DESIGN UNITS ☒mm ☐INCH | THIRD ANGLE PROJECTION | DIMENSIONS: ☐mm/INCH ☐INCH/mm ☒mm ONLY | SHT | REV | REVISE ON CAD ONLY

DRAWN BY & DATE: A.Ida '04/01/06
CHECKED BY & DATE: K.Takase '04/01/06
APPROVED BY & DATE: J.Miyazawa / Y.Ito '04/01/06

TITLE: 0.5 mm PITCH B/B CONN. REC. HOUSING ASS'Y (H=2,3mm) WITH FITTING NAIL -LEAD FREE-

molex MOLEX INCORPORATED

CAD FILENAME: SD-54363-038.S01 | MATERIAL NO.: SEE CHART | DRAWING NO.: SD-54363-038 | SHEET NO.: 1 OF 2

THIS DRAWING CONTAINS INFORMATION THAT IS PROPRIETARY TO MOLEX INCORPORATED AND SHOULD NOT BE USED WITHOUT WRITTEN PERMISSION.

SIZE B

DWG. NO. SD-54363-038

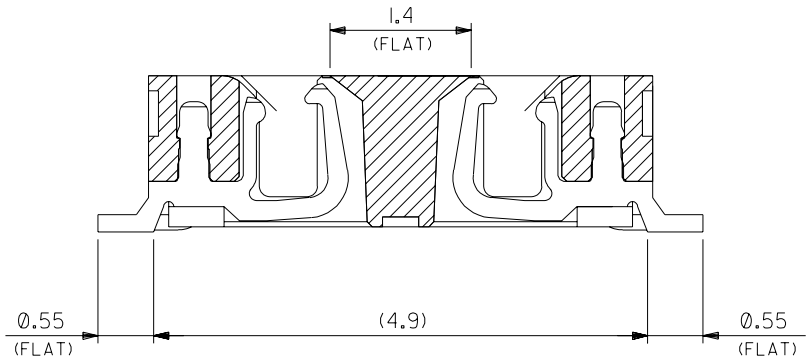

製品断面図（半田付け部、吸着面寸法）
DETAIL FOR SOLDERING AND VACUUM AREA

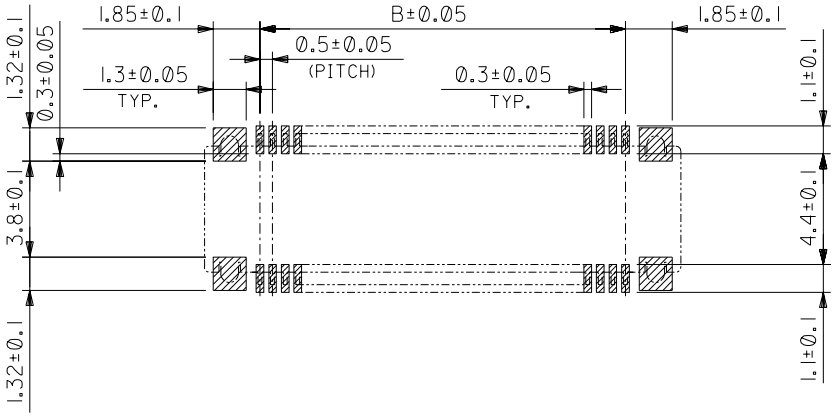

推奨基板寸法
RECOMMENDED PCB PATTERN LAYOUT
(SCALE:5-1)

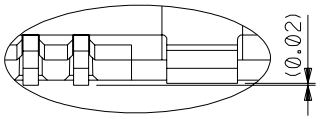

T部詳細
DETAIL T

DO NOT SCALE DRAWING

EC NO.	DRWN:	CH'K:	APPR:
EC NO.	DRWN:	CH'K:	APPR:
EC NO.	DRWN:	CH'K:	APPR:
EC NO.	DRWN:	CH'K:	APPR:
SEE SHEET 1 OF 2			
EC NO.	DRWN:	CH'K:	APPR:
∅			

DESCRIPTION

REV

MATERIAL 材料: 注記参照 SEE NOTES

FINISH 仕上げ: 注記参照 SEE NOTES

WIRE RANGE 適用電線範囲: —#—

INS. RANGE 被覆外径: —#—

GENERAL TOLERANCES: (UNLESS SPECIFIED) 一般公差	
10 UNDER 未満	±0.2
10 OVER 以上 30 UNDER 未満	±0.25
30 OVER 以上	±0.3
ANGLE 角度	±3°

SCALE 20-1 | DESIGN UNITS ☒mm ☐INCH | THIRD ANGLE PROJECTION

DRAWN BY & DATE: A. Ida '04/01/06

CHECKED BY & DATE: R. Takase '04/01/06

APPROVED BY & DATE: M. Inazawa / Y. Ito '04/01/06

CAD FILENAME: SD-54363-038.S02

DIMENSIONS: ☐mm/INCH ☐INCH/mm ☒mm ONLY

SHT | REV

REVISE ON CAD ONLY

TITLE: 0.5 mm PITCH B/B CONN. REC. HOUSING ASS'Y (H=2,3mm) WITH FITTING NAIL -LEAD FREE-

molex MOLEX INCORPORATED

MATERIAL NO.: SEE CHART

DRAWING NO.: SD-54363-038

SHEET NO.: 2

THIS DRAWING CONTAINS INFORMATION THAT IS PROPRIETARY TO MOLEX INCORPORATED AND SHOULD NOT BE USED WITHOUT WRITTEN PERMISSION.

SIZE B

EN-02J(097) MXJ-54

DWG. NO. SD-54363-039

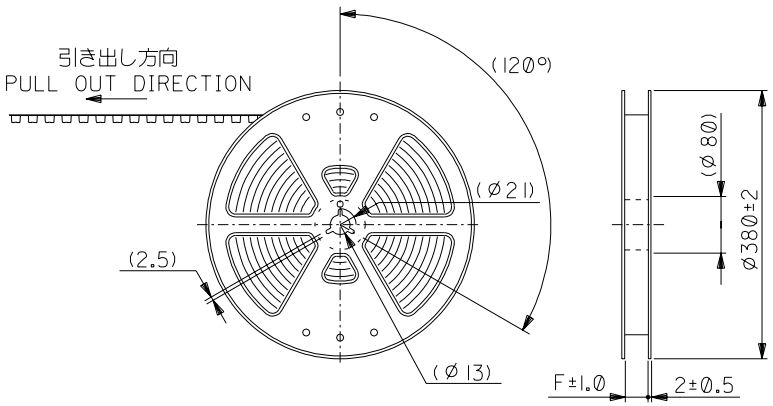

注）
NOTES

1. 製品番号54363-**71 詳細寸法については、製品単体図面を参照下さい。
IN THE PACKAGE PART NUMBER 54363-**71 DETAILED DIMENSIONS, SEE SALES DRAWING FOR CONNECTOR.
2. 梱包数量：2500個/リール
NUMBER OF CONNECTORS:2500 PCS/REEL.
3. リードテープ長さ
LEAD TAPE LENGTH

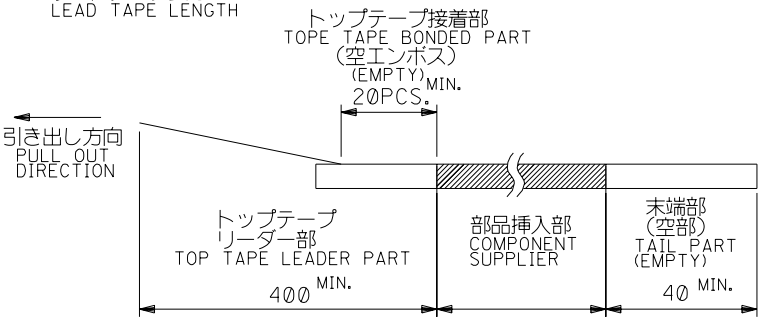

4. トップテープの剥離強度：（剥離方向は下図参照）
PEELING OFF FORCE OF TOP TAPE (PELLING DIRECTION AS SHOWN IN FOLLOWING FIGIRE.)
0.1～1.3N（10～130gf）

尚、本規格値は、出荷時に適用。
THIS REQUIREMENT SHOULD BE APPLIED AT SHIPMENT.
（但し、輸送時に剥離が発生しない事。）
(PEEL OFF SHOULD NOT BE ALLOWED,DURING TRANSPORTATION.)

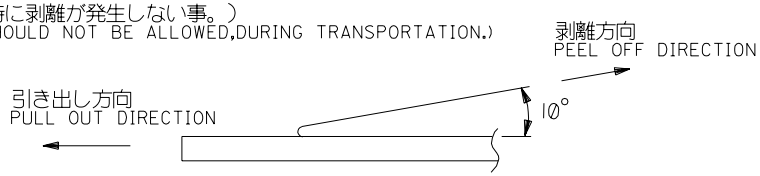

5. 材料
MATERIAL
キャリアテープ：ポリプロピレン（PP）
CARRIER TAPE:POLYPROPYLENE(PP)
トップテープ：PET，PE，PEF
TOP TAPE:PET,PE,PEF
リール：ポリスチレン
REEL :POLYSTYRENE

6. この製品は54363-**01，（エンボス梱包品 54363-**08）の鉛フリー品です。
THIS PRODUCTE IS 'LEAD FREE' OF 54363-**01, (EMBOSSED TAPE PKG 54363-**08)

DO NOT SCALE DRAWING

REV	DESCRIPTION	EC NO.	DRWN	CH'K	APPR
A	REVISED	J2004-2225	A.IDA '04/02/02	H.TAKASE	J.MIYAZAWA/YO.ITO
Ø	RELEASED	J2004-1740	A.IDA '04/01/06	H.TAKASE	J.MIYAZAWA/YO.ITO

MATERIAL 材料: 注記参照 SEE NOTES
FINISH 仕上げ: 注記参照 SEE NOTES
WIRE RANGE 適用電線範囲: —//—
INS. RANGE 被覆外径: —//—

GENERAL TOLERANCES: (UNLESS SPECIFIED) 一般公差

10 UNDER 未満	±0.2
10 OVER 以上 30 UNDER 未満	±0.25
30 OVER 以上	±0.3
ANGLE 角度	±3°

SCALE: NONE
DESIGN UNITS: ☒mm ☐INCH
THIRD ANGLE PROJECTION
DIMENSIONS: ☐mm/INCH ☐INCH/mm ☒mm ONLY
SHT | REV
REVISE ON CAD ONLY
DRAWN BY & DATE: A.Ida '04/01/06
CHECKED BY & DATE: H.Takase '04/01/06
APPROVED BY & DATE: J.Miyazawa/Y.Ito '04/01/06
CAD FILENAME: SD-54363-039.S01
TITLE: 54363-**71 TAPING PACKAGE -LEAD FREE-
MOLEX INCORPORATED
MATERIAL NO.: SEE CHART
DRAWING NO.: SD-54363-039
SHEET NO.: 1 OF 2
SIZE: B

THIS DRAWING CONTAINS INFORMATION THAT IS PROPRIETARY TO MOLEX INCORPORATED AND SHOULD NOT BE USED WITHOUT WRITTEN PERMISSION.

EN-02J(097) MXJ-54

54363039.S01

DWG. NO. SD-54363-039

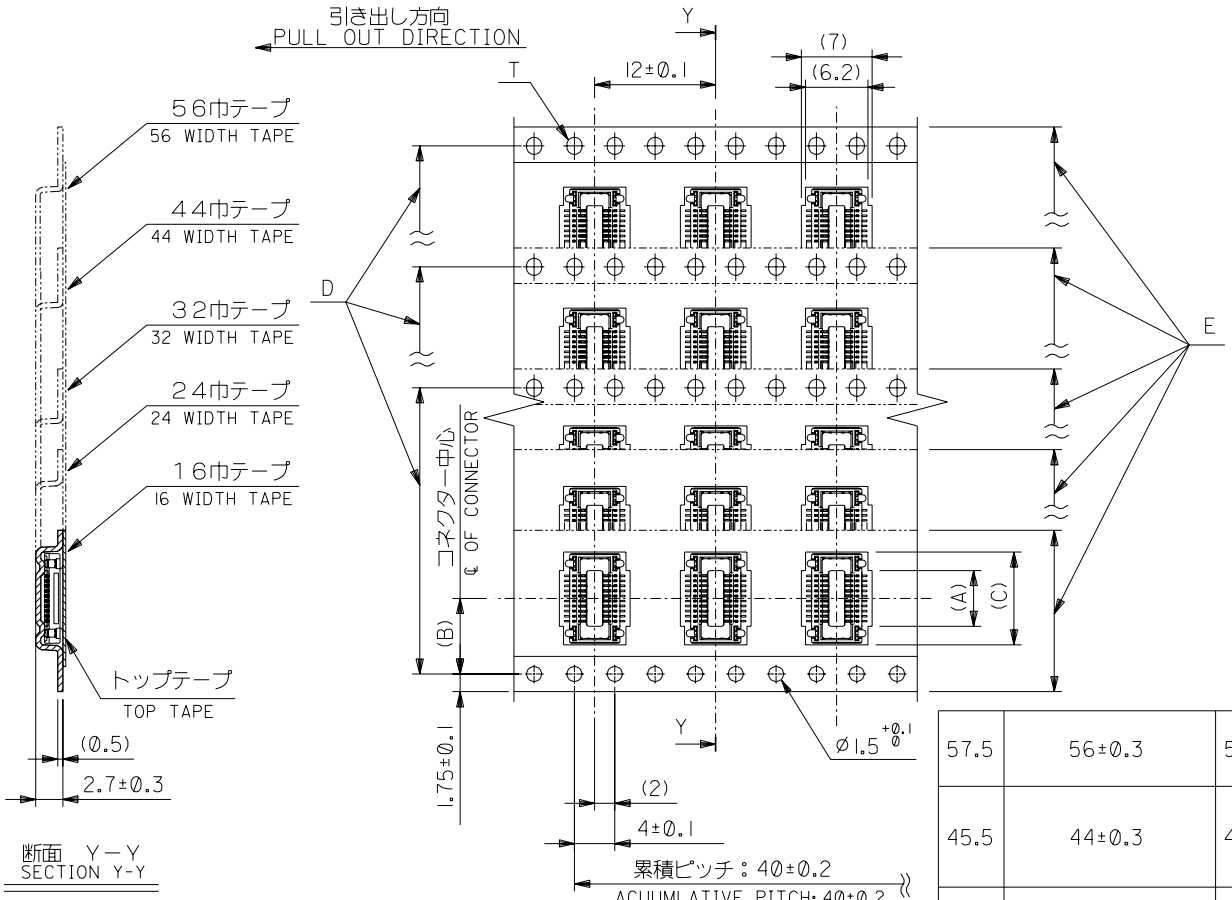

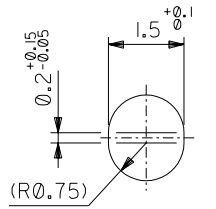

F	E キャリアテープ幅 CARRIER TAPE WIDTH	D	(C)	(B)	(A)	製品番号 MATERIAL NO.	極数 CIRCUITS	量産対応 AVAILABLE
57.5	56±0.3	52.4	44.2	26.2	40.55	54363-1678	160	—
			39.2		35.55	54363-1478	140	○
			34.2		30.55	54363-1278	120	○
45.5	44±0.3	40.4	31.7	20.2	28.05	54363-1178	110	○
			29.2		25.55	54363-1078	100	○
			26.7		23.05	54363-0978	90	—
			24.2		20.55	54363-0878	80	○
33.5	32±0.3	28.4	21.7	14.2	18.05	54363-0778	70	○
			19.2		15.55	54363-0678	60	○
25.5	24±0.3	〃	16.7	11.5	13.05	54363-0578	50	○
			14.2		10.55	54363-0478	40	○
			11.7		8.05	54363-0378	30	○
17.5	16±0.3	〃	9.2	7.5	5.55	54363-0278	20	○

DO NOT SCALE DRAWING

EC NO.	DRWN:	CH'K:	APPR:
EC NO.	DRWN:	CH'K:	APPR:
EC NO.	DRWN:	CH'K:	APPR:
EC NO.	DRWN:	CH'K:	APPR:
SEE SHEET 1 OF 2			
ECNNO.	DRWN:	CH'K:	APPR:
Ø			

DESCRIPTION / REV

MATERIAL 材料 〃
FINISH 仕上げ 〃
WIRE RANGE 適用電線範囲 〃
INS. RANGE 被覆外径 〃

GENERAL TOLERANCES: (UNLESS SPECIFIED) 一般公差

10 UNDER 未満	±0.2
10 OVER 以上 30 UNDER 未満	±0.25
30 OVER 以上	±0.3
ANGLE 角度	±3°

SCALE NONE
DESIGN UNITS ☒mm ☐INCH
THIRD ANGLE PROJECTION
DIMENSIONS: ☐mm/INCH ☐INCH/mm ☒mm ONLY
SHT REV
REVISE ON CAD ONLY

DRAWN BY & DATE A. Ida '04/01/06
CHECKED BY & DATE R. Takase '04/01/06
APPROVED BY & DATE '04/01/06

TITLE:
54363-**71
TAPING PACKAGE
-LEAD FREE-

molex MOLEX INCORPORATED

CAD FILENAME SD-54363-039.S02
MATERIAL NO. SEE CHART
DRAWING NO. SD-54363-039
SHEET NO. 2
SIZE B

THIS DRAWING CONTAINS INFORMATION THAT IS PROPRIETARY TO MOLEX INCORPORATED AND SHOULD NOT BE USED WITHOUT WRITTEN PERMISSION.

54363039.S02

EN-02J(097) MXJ-54