molex
one company > a world of innovation

This document was generated on 11/05/2009

PLEASE CHECK WWW.MOLEX.COM FOR LATEST PART INFORMATION

Part Number: 0533093270

Status: Active

Description: 0.80mm (.031") Pitch Board-to-Board Header, Surface Mount, Dual Row, Right Angle, Lead-free, 32 Circuits

Documents:

3D Model
Drawing (PDF)
Product Specification PS-52465-014 (PDF)
Product Specification PS-52588-031 (PDF)
RoHS Certificate of Compliance (PDF)

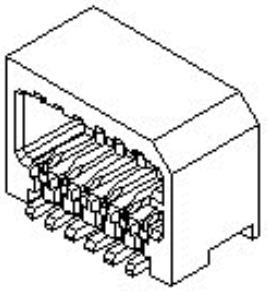

Series image - Reference only

General	
Product Family	PCB Headers
Series	53309
Application	Board-to-Board
Product Name	N/A
Physical	
Breakaway	No
Circuits (Loaded)	32
Circuits (maximum)	32
Color - Resin	Natural
Durability (mating cycles max)	30
First Mate / Last Break	No
Glow-Wire Compliant	No
Guide to Mating Part	No
Keying to Mating Part	None
Lock to Mating Part	Yes
Mated Height (in)	0.222 In
Mated Height (mm)	5.65 mm
Material - Metal	Phosphor Bronze
Material - Plating Mating	Tin
Material - Plating Termination	Tin
Material - Resin	High Temperature Thermoplastic
Number of Rows	2
Orientation	Right Angle
PC Tail Length (in)	0.016 In
PC Tail Length (in)	0.020 In
PC Tail Length (mm)	0.40 mm
PC Tail Length (mm)	0.50 mm
PCB Locator	No
PCB Retention	None
Packaging Type	Embossed Tape on Reel
Pitch - Mating Interface (in)	0.031 In
Pitch - Mating Interface (mm)	0.80 mm
Plating min: Mating (µin)	40
Plating min: Mating (µm)	1
Plating min: Termination (µin)	40
Plating min: Termination (µm)	1
Polarized to PCB	No
Shrouded	Fully
Stackable	No
Temperature Range - Operating	-20°C to +105°C
Termination Interface: Style	Surface Mount
Electrical	
Current - Maximum	0.5A
Voltage - Maximum	50V

EU RoHS
ELV and RoHS Compliant
REACH SVHC
Not Reviewed
Halogen-Free Status
Not Reviewed

China RoHS

Need more information on product environmental compliance?

Email productcompliance@molex.com
Please visit the Contact Us section for any non-product compliance questions.

Search Parts in this Series
53309 Series

Mates With
52465 Board-to-Board Receptacle

Material Info

Reference - Drawing Numbers

Product Specification	PS-52465-014
Product Specification	PS-52588-031
Product Specification	RPS-52465-042
Product Specification	RPS-52465-047
Product Specification	RPS-52465-049
Product Specification	RPS-52588-040
Product Specification	RPS-52588-041
Sales Drawing	SD-53309-011
Sales Drawing	SD-53309-012

This document was generated on 11/05/2009

PLEASE CHECK WWW.MOLEX.COM FOR LATEST PART INFORMATION

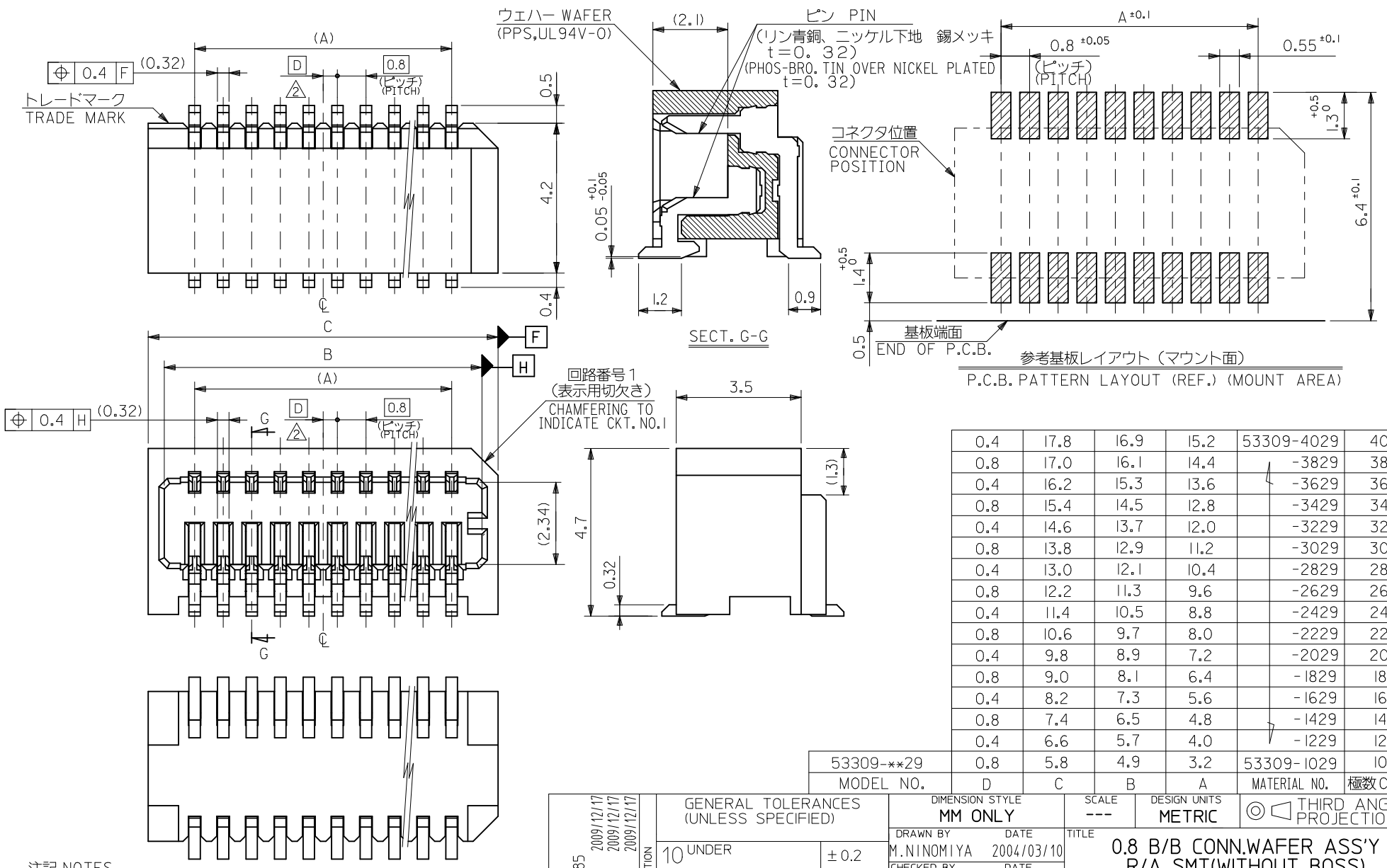

0.4	17.8	16.9	15.2	53309-4029	40
0.8	17.0	16.1	14.4	-3829	38
0.4	16.2	15.3	13.6	-3629	36
0.8	15.4	14.5	12.8	-3429	34
0.4	14.6	13.7	12.0	-3229	32
0.8	13.8	12.9	11.2	-3029	30
0.4	13.0	12.1	10.4	-2829	28
0.8	12.2	11.3	9.6	-2629	26
0.4	11.4	10.5	8.8	-2429	24
0.8	10.6	9.7	8.0	-2229	22
0.4	9.8	8.9	7.2	-2029	20
0.8	9.0	8.1	6.4	-1829	18
0.4	8.2	7.3	5.6	-1629	16
0.8	7.4	6.5	4.8	-1429	14
0.4	6.6	5.7	4.0	-1229	12
53309-**29	0.8	5.8	4.9	3.2	53309-1029	10
MODEL NO.	D	C	B	A	MATERIAL NO.	極数CKT.

注記 NOTES

1. 嵌合相手：52465,52588シリーズ
   MATE WITH : 52465,52588 SERIES
2. ウェハーの ℄ から隣接するピンの ℄ 迄の位置を示す。
   SHOW POSITION FROM ℄ OF WAFER TO ℄ OF ADJACENT PINS.
3. 本製品は 53309-**27 の鉛フリー品である。
   THIS PRODUCT IS LEAD FREE OF 53309-**27

REVISED
EC NO: J2010-1285 2009/12/17
DRWN:YONOO2 2009/12/17
CH'KD:SMARUYAMA 2009/12/17
APPR:SMARUYAMA 2009/12/17
DESCRIPTION
REV B

GENERAL TOLERANCES (UNLESS SPECIFIED)

10 UNDER	±0.2
10 OVER 30 UNDER	±0.25
30 OVER	±0.3
ANGULAR	±3 °

DRAFT WHERE APPLICABLE MUST REMAIN WITHIN DIMENSIONS

DIMENSION STYLE	MM ONLY
SCALE	---
DESIGN UNITS	METRIC
	THIRD ANGLE PROJECTION
DRAWN BY / DATE	M.NINOMIYA 2004/03/10
CHECKED BY / DATE	K.TOJO 2004/03/10
APPROVED BY / DATE	M.SASAO 2004/03/10
MATERIAL NO.	SEE TABLE
TITLE	0.8 B/B CONN.WAFER ASS'Y R/A SMT(WITHOUT BOSS)
	MOLEX INCORPORATED
DOCUMENT NO.	SD-53309-011
SHEET NO.	1 OF 2
SIZE	A3

THIS DRAWING CONTAINS INFORMATION THAT IS PROPRIETARY TO MOLEX INCORPORATED AND SHOULD NOT BE USED WITHOUT WRITTEN PERMISSION

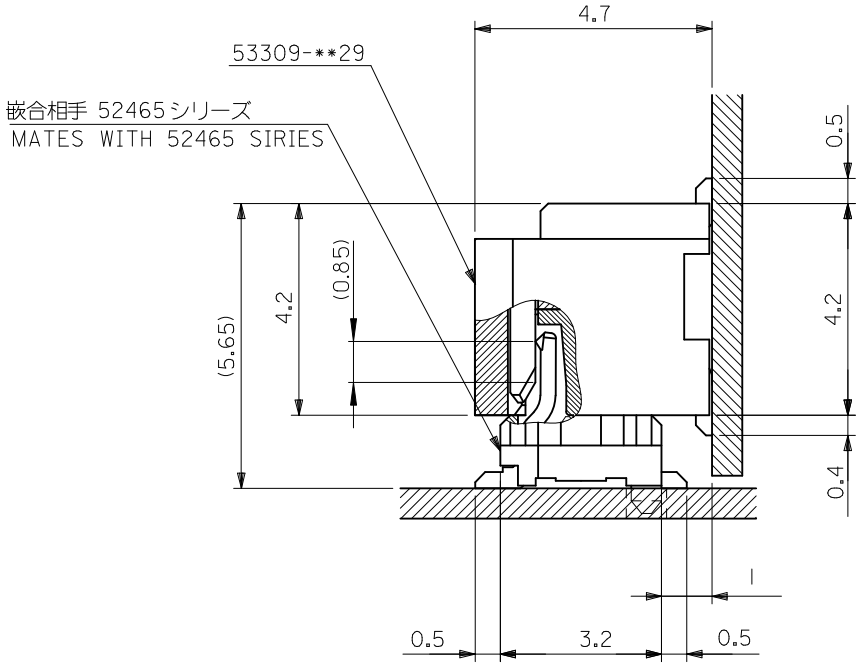

嵌合状態図（参考）
MATED DRAWING(REF.)

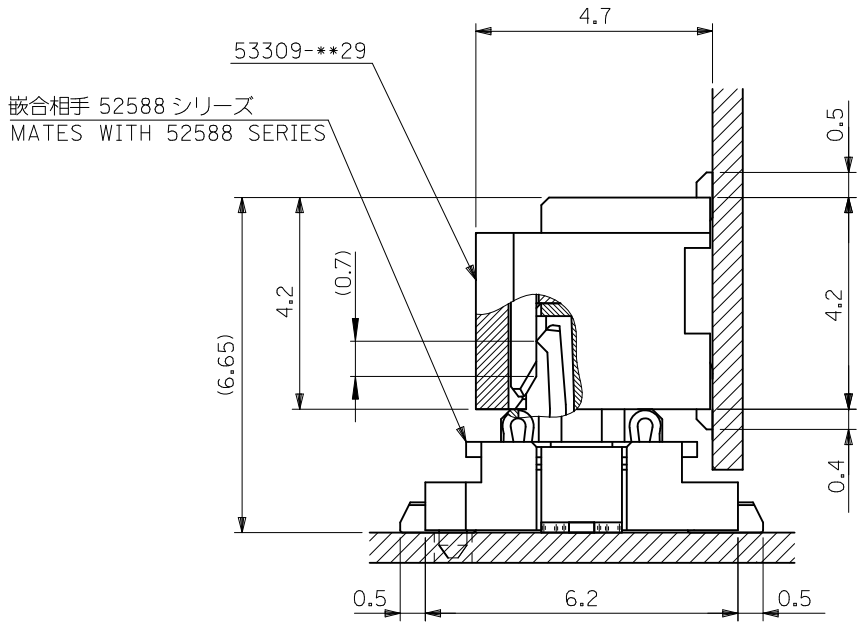

嵌合状態図（参考）
MATED DRAWING(REF.)

REVISED
EC NO: J2010-1285 2009/12/17
DRWN:YONOO2 2009/12/17
CH'KD:SMARUYAMA 2009/12/17
APPR:SMARUYAMA 2009/12/17
DESCRIPTION
B
REV

GENERAL TOLERANCES (UNLESS SPECIFIED)

10 UNDER	±0.2
10 OVER 30 UNDER	±0.25
30 OVER	±0.3
ANGULAR	±3 °

DRAFT WHERE APPLICABLE MUST REMAIN WITHIN DIMENSIONS

DIMENSION STYLE: MM ONLY
SCALE: ---
DESIGN UNITS: METRIC
THIRD ANGLE PROJECTION

DRAWN BY: M.NINOMIYA DATE: 2004/03/10
CHECKED BY: K.TOJO DATE: 2004/03/10
APPROVED BY: M.SASAO DATE: 2004/03/10

TITLE: 0.8 B/B CONN.WAFER ASS'Y R/A SMT(WITHOUT BOSS)

MOLEX INCORPORATED

MATERIAL NO.: SEE SHEET 1
DOCUMENT NO.: SD-53309-011
SHEET NO.: 2 OF 2
SIZE: A3

THIS DRAWING CONTAINS INFORMATION THAT IS PROPRIETARY TO MOLEX INCORPORATED AND SHOULD NOT BE USED WITHOUT WRITTEN PERMISSION

DWG. NO. SD-53309-012

:MM DIMENSIONS IN METRIC DO NOT SCALE DRAWING

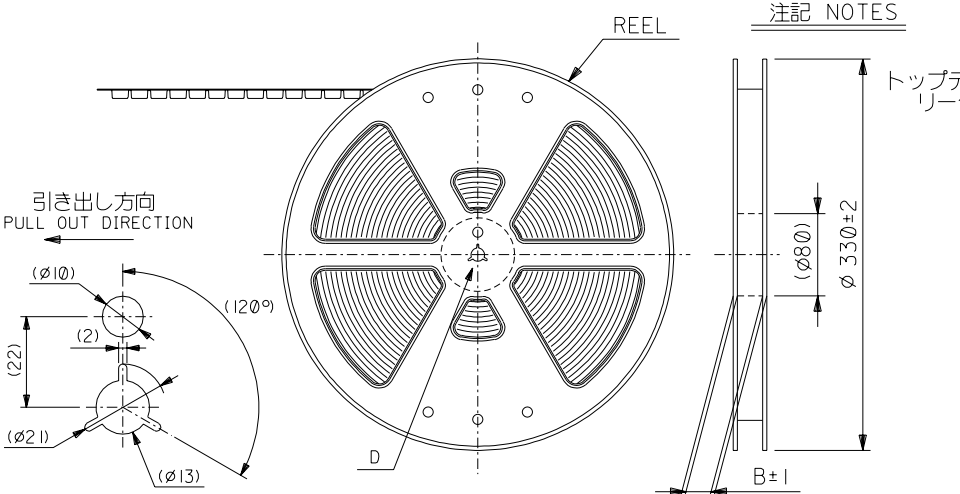

DETAIL D

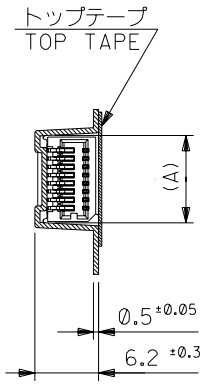

SECT. Z-Z

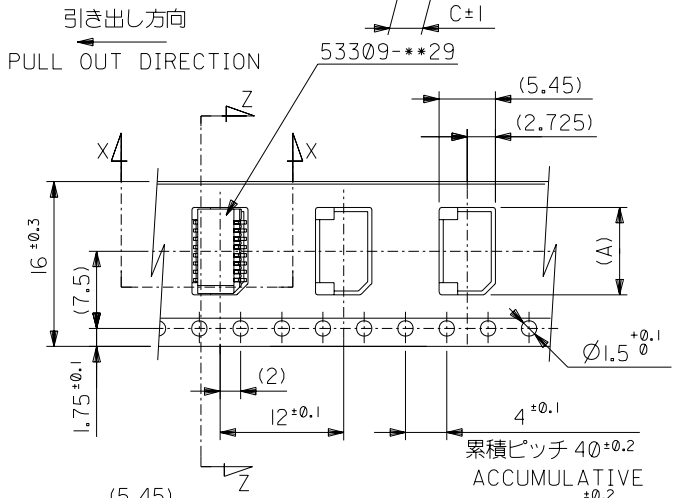

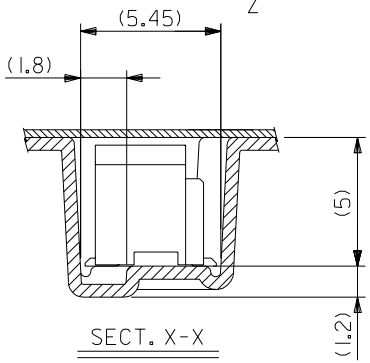

SECT. X-X

16mm幅キャリアテープ

16mm WIDTH CARRIER TAPE

注記 NOTES

1. 梱包数量：1000個／リール NUMBER OF CONNECTORS:1000PCS/REEL

2. リードテープ長さ LEAD TAPE LENGTH

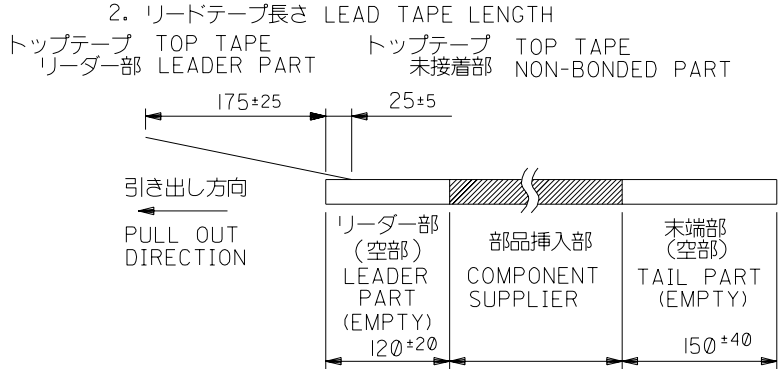

3. トップテープの剥離強度：（剥離方向は下図参照）
0.1N～1.3N {10gf～130gf} 尚、本規格値は、出荷時に適用。
（但し、輸送時に剥離が発生しない事。）
PEELING OFF FORCE OF TOP TAPE
0.1N～1.3N{10gf～130gf} (PEELING DIRECTION AS SHOWN IN FOLLOWING FIG.)
THIS REQUIREMENT SHOULD BE APPLITED AT SHIPMENT
PEEL OFF SHOULD NOT BE ALLOWED,
DURING TRANSPORTATION

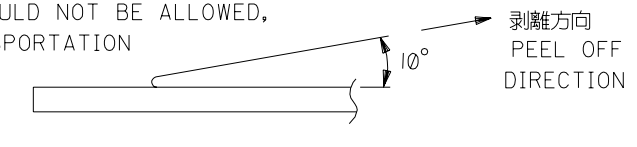

4. 材料
キャリアテープ：ポリプロピレン（PP）
トップテープ：PET，PE，PEF
リール：ポリスチレン（PS）
MATERIAL <リサイクル材を含む>
CARRIER TAPE:POLYPROPYLENE
TOP TAPE:PET,PE,PEF
REEL:POLYSTYRENE(PS)
<RECYCLE MATERIAL CONTAINED>

5. 本製品は 53309-**91 の鉛フリー品である。
THIS PRODUCT IS LEAD FREE OF 53309-**91.

キャリアテープ幅 CARRIER TAPE WIDTH	C	B	(A)	MATERIAL NO.	極数 CIRCUIT
16	21.4	17.4	9.3	53309-1870	18
			8.5	53309-1670	16
			7.7	53309-1470	14
			6.9	53309-1270	12
			6.1	53309-1070	10

		記号 LTR	変更内容 REVISION RECORD	DR. CHK.	日付 DATE
53309-**70					
MODEL NO.					
角度 ANGLE	±3°				
30 以上 OVER	±0.3				
10 以上 OVER 30 未満 UNDER	±0.25				
10 未満 UNDER	±0.2	0	新規作成 RELEASED (J2004-2995)	M.N K.T	'04/03/10
一般公差 GENERAL TOLERANCES					

材料 MATERIAL	注記参照 SEE NOTES
仕上げ FINISH	//
適用電線範囲 WIRE RANGE	//
被覆外径 INS. RANGE	//
DRAWN BY '04/03/10	M.NINOMIYA
CHK'D BY '04/03/10	K.TOJO
APP'D BY '04/03/10	M.SASAO
尺度 SCALE	//

MOLEX-JAPAN CO.,LTD. 日本モレックス株式会社

REVISE ONLY ON CAD SYSTEM

TITLE 名称
0.8 BtB Conn Wafer Assy
RA SMT Without Boss
Embstp Pkg
-LEAD FREE-

DWG. NO. (SHEET 1 OF 2) SD-53309-012 REV 0

SD-53309-012.S01

THIS DRAWING CONTAINS INFORMATION THAT IS PROPRIETARY TO MOLEX(JAPAN) AND SHOULD NOT BE USED WITHOUT WRITTEN PERMISSION
本図面は日本モレックス（株）の所有する情報を含むもので当社の許可なく複製を禁止する。

EN-0IC(032)MXJ-32

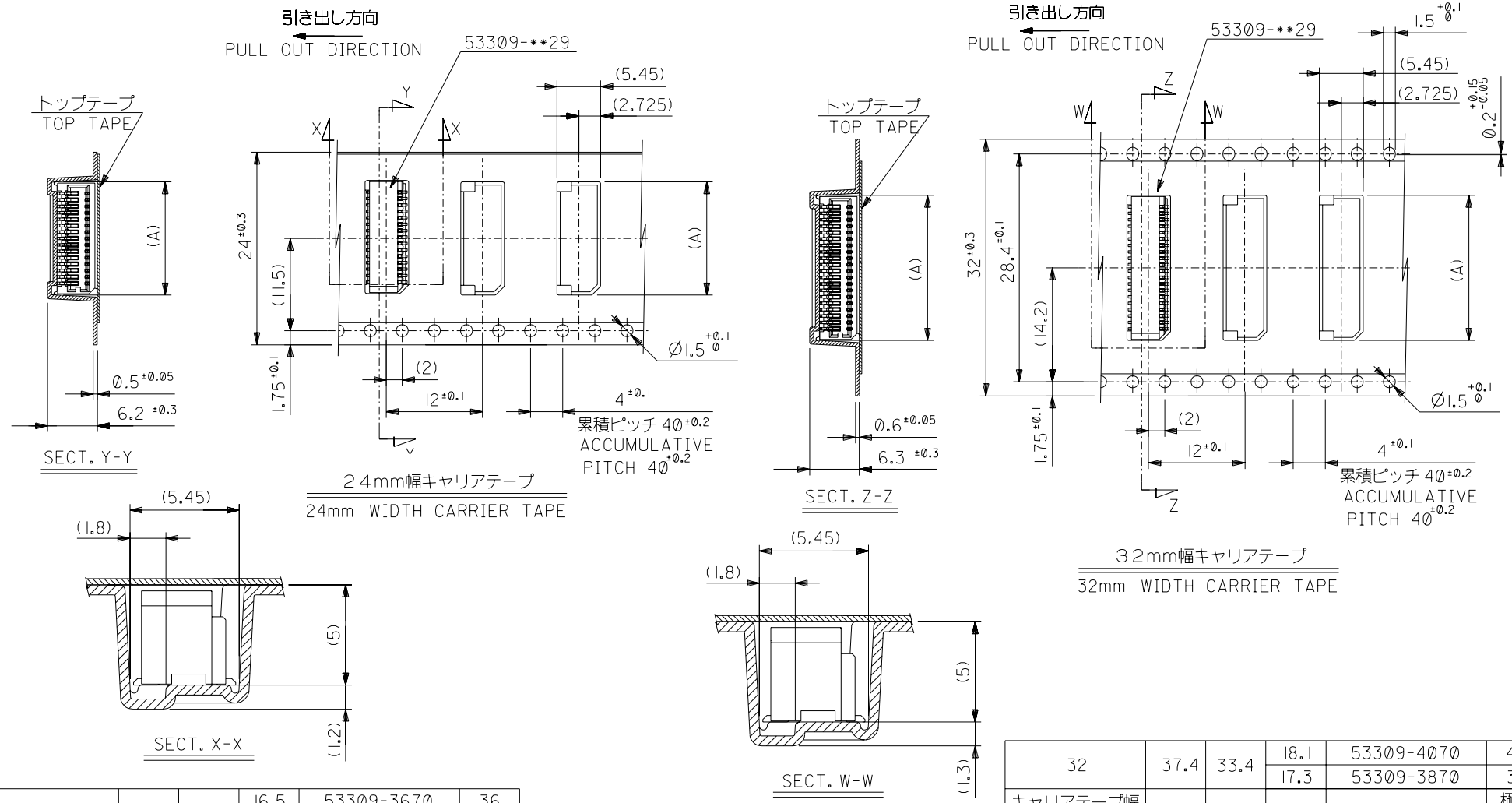

キャリアテープ幅 CARRIER TAPE WIDTH	C	B	(A)	MATERIAL NO.	極数 CIRCUIT
24	29.4	25.4	16.5	53309-3670	36
			15.7	53309-3470	34
			14.9	53309-3270	32
			14.1	53309-3070	30
			13.3	53309-2870	28
			12.5	53309-2670	26
			11.7	53309-2470	24
			10.9	53309-2270	22
			10.1	53309-2070	20

キャリアテープ幅 CARRIER TAPE WIDTH	C	B	(A)	MATERIAL NO.	極数 CIRCUIT
32	37.4	33.4	18.1	53309-4070	40
			17.3	53309-3870	38

53309-**70					
MODEL NO.					
角度 ANGLE	±3°				
30 以上 OVER	±0.3				
10 以上 OVER 30 未満 UNDER	±0.25				
10 未満 UNDER	±0.2	0	新規作成 RELEASED (J2004-2995)	M.N K.T	'04/03/10
一般公差 GENERAL TOLERANCES		記号 LTR	変更内容 REVISION RECORD	DR. CHK.	日付 DATE

材料 MATERIAL
SHEET 1 OF 2参照
REFER TO SHEET 1 OF 2

仕上げ FINISH —//—
適用電線範囲 WIRE RANGE —//—
被覆外径 INS. RANGE —//—

DRAWN BY '04/03/10 M.NINOMIYA
CHK'D BY '04/03/10 K.TOJO
APP'D BY '04/03/10 M.SASAO
尺度 SCALE —//—

molex MOLEX-JAPAN CO.,LTD. 日本モレックス株式会社

REVISE ONLY ON CAD SYSTEM

TITLE 名称
0.8 BtB Wafer Assy
RA SMT Without Boss
Embstp Pkg
-LEAD FREE-

DWG. NO.(SHEET 2 OF 2) SD-53309-012
REV 0

DWG. NO. SD-53309-012

:MM DIMENSIONS IN METRIC DO NOT SCALE DRAWING

SD-53309-012.S02

THIS DRAWING CONTAINS INFORMATION THAT IS PROPRIETARY TO MOLEX(JAPAN) AND SHOULD NOT BE USED WITHOUT WRITTEN PERMISSION
本図面は日本モレックス（株）の所有する情報を含むもので 当社の許可なく複製を禁止する。

EN-01C(032)MXJ-32