Online data sheet



LL3-TH15

LL3

FIBER-OPTIC SENSORS AND FIBERS

SICK
Sensor Intelligence.



Ordering information

Type	Part no.
LL3-TH15	5325975

Other models and accessories → www.sick.com/LL3

Detailed technical data

Features

Device type	Fibers
Detection principle	Through-beam system
For fiber-optic sensor	GLL170(T), WLL180T
Fiber length	515 mm
Fiber material	Stone, ceramic, glass
Jacket material	Stainless steel
Fiber head material	Copper-zinc alloy (CuZn)
Outer diameter, fiber-optic cable connection	2.2 mm
Fiber-optic cable cuttable	– [1]
Smooth sleeve diameter (greatest diameter)	≥ 4 mm
Fiber-optic head design	Smooth sleeve, 90° deflection
Fiber arrangement	Monofiber
Core structure	Ø 0,8 mm Monofiber
Bend radius, fibre-optic cable	25 mm
Angle of dispersion < 60°	No
Compatibility with infrared light (1,450 nm)	Yes
Ambient operating temperature	–60 °C ... +200 °C
Application	Heat-resistant (≥100 °C)
Highly flexible/elastic fibers (bend radius 1–4 mm)	No
Adapter end sleeves required	No
Angle of dispersion	60.23°
Integrated lens	Yes
Minimal object diameter	0.16 mm [2]
Included with delivery	Mounting, 2 x M4 hexagon nut, 2 x M4 hexagon nut (plastic), 2 x washer, FC fiber cutter (5304141), LL3-TB09
Compatibility tip adapters	No

[1] FC fiber optic cable cutter included in delivery.

[2] Minimum detectable object was determined at optimum measuring distance and optimum setting.

Classifications

ECl@ss 5.0	27270905
ECl@ss 5.1.4	27270905

ECl@ss 6.0	27270905
ECl@ss 6.2	27270905
ECl@ss 7.0	27270905
ECl@ss 8.0	27270905
ECl@ss 8.1	27270905
ECl@ss 9.0	27270905
ETIM 5.0	EC002651
ETIM 6.0	EC002651
UNSPSC 16.0901	39121528

Sensing ranges with WLL180T

Operating mode 16 µs	90 mm
Operating mode 70 µs	290 mm
Operating mode 250 µs	480 mm
Operating mode 2 ms	970 mm
Operating mode 8 ms	1,000 mm

Sensing ranges with GLL170

Operating mode 250 µs	270 mm

Sensing ranges with GLL170T

Operating mode 50 µs	290 mm
Operating mode 250 µs	410 mm

Dimensional drawing (Dimensions in mm (inch))

LL3-TH15

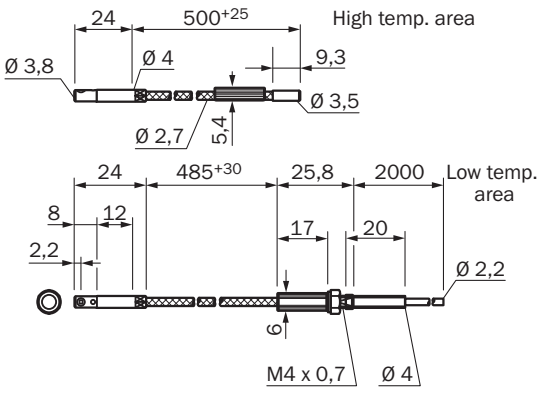

SICK AT A GLANCE

SICK is one of the leading manufacturers of intelligent sensors and sensor solutions for industrial applications. A unique range of products and services creates the perfect basis for controlling processes securely and efficiently, protecting individuals from accidents and preventing damage to the environment.

We have extensive experience in a wide range of industries and understand their processes and requirements. With intelligent sensors, we can deliver exactly what our customers need. In application centers in Europe, Asia and North America, system solutions are tested and optimized in accordance with customer specifications. All this makes us a reliable supplier and development partner.

Comprehensive services complete our offering: SICK LifeTime Services provide support throughout the machine life cycle and ensure safety and productivity.

For us, that is “Sensor Intelligence.”

WORLDWIDE PRESENCE:

Contacts and other locations –www.sick.com