Model 5319
Adapter – BNC Female To Phono Plug

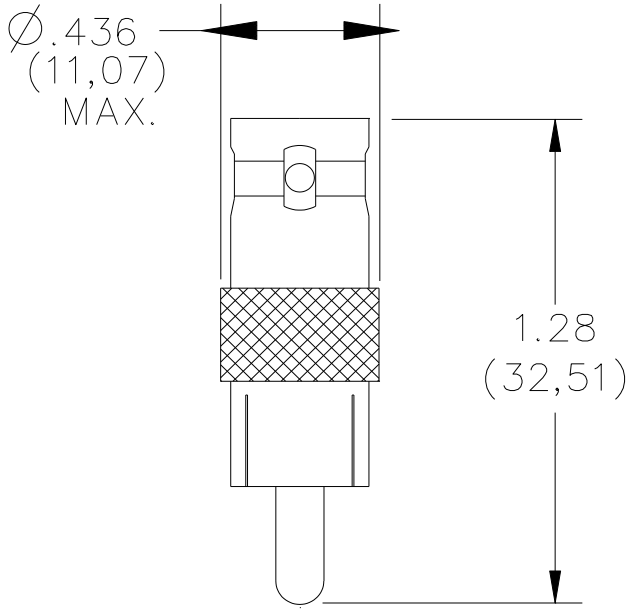

FEATURES:

- ✓ Permits standard BNC cables (male ends) to be used with equipment having phono jacks.
- ✓ Gold plated center contact for minimum contact resistance and superior signal transfer.
- ✓ Machined (not die-cast) components for long life.

MATERIALS:

Body and Outer Contacts: Nickel plated brass
Center Contact - Phono plug: Gold plated brass
Center Contact - BNC: Gold plated beryllium copper
Dielectric: Delrin

RATINGS:

Temperature: +102ºC. (216ºF.) Max.
Voltage: Hands free testing in controlled voltage environments: 500 Vrms Max. *For CE compliance*: not intended for hand-held use at voltage above 33 Vrms/70 Vdc.

ORDERING INFORMATION: Model 5319

All dimensions are in inches. Tolerances (except noted): .xx = ±.02" (,51 mm), .xxx = ± .005" (,127 mm).
All specifications are to the latest revisions. Specifications are subject to change without notice.
Registered trademarks are the property of their respective companies.

Sales: 800-490-2361 Fax: 888-403-3360 Technical Assistance: 800-241-2060
For "Where to Buy" information, visit the Pomona web site at www.pomonaelectronics.com

Rev: 100
D1094372