molex
one company > a world of innovation

This document was generated on 06/05/2010

PLEASE CHECK WWW.MOLEX.COM FOR LATEST PART INFORMATION

Part Number: 0527932270
Status: Active
Overview:
Description: 1.00mm (.039") Pitch Right Angle, SMT, Non-ZIF, Top Contact Style, 22 Circuits, Lead-free

Agency Certification

CSA	LR19980
UL	E29179

General

Product Family	FFC/FPC Connectors
Series	52793
Overview	ffc_fpc_smt
Product Name	N/A

Physical

Circuits (Loaded)	22
Contact Position	Top
Durability (mating cycles max)	10
Entry Angle	90° Angle
Flammability	94V-0
Mated Height (in)	0.122 In
Mated Height (mm)	3.10 mm
Material - Metal	Phosphor Bronze
Material - Plating Mating	Tin-Bismuth
Material - Plating Termination	Tin-Bismuth
Number of Rows	1
Orientation	Right Angle
PCB Locator	No
PCB Retention	Yes
Packaging Type	Embossed Tape on Reel
Pitch - Mating Interface (in)	0.039 In
Pitch - Mating Interface (mm)	1.00 mm
Plating min: Mating (µin)	40
Plating min: Mating (µm)	1
Plating min: Termination (µin)	40
Plating min: Termination (µm)	1
Polarized to PCB	No
Stackable	No
Temperature Range - Operating	-20°C to +85°C
Termination Interface: Style	Surface Mount
Wire/Cable Type	FFC/FPC

Electrical

Current - Maximum per Contact	0.5A
Voltage - Maximum	50V

Material Info

Reference - Drawing Numbers

Packaging Specification	SPK-52793-001
Product Specification	PS-52793-014, RPS-52793-016, RPS-52793-018, RPS-52793-019, RPS-52793-020, RPS-52793-021, RPS-52793-024
Sales Drawing	SD-52793-011, SD-52793-012

EU RoHS
ELV and RoHS Compliant
REACH SVHC
Contains SVHC: No
Halogen-Free Status
Not Halogen-Free

China RoHS

Need more information on product environmental compliance?

Email productcompliance@molex.com
For a multiple part number RoHS Certificate of Compliance, click here

Please visit the Contact Us section for any non-product compliance questions.

Search Parts in this Series
52793Series

This document was generated on 06/05/2010

PLEASE CHECK WWW.MOLEX.COM FOR LATEST PART INFORMATION

DWG. NO. SD-52793-011

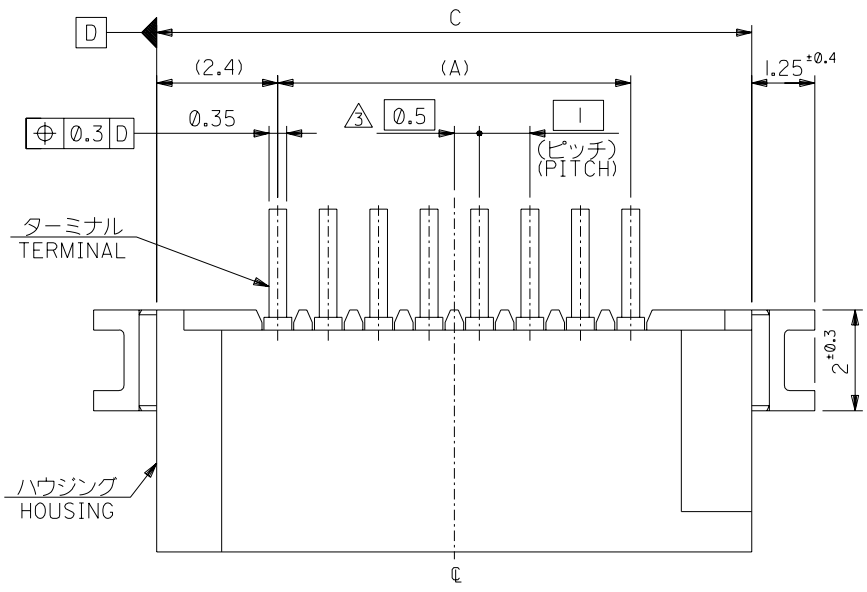

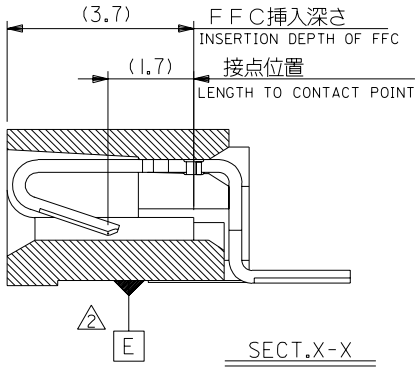

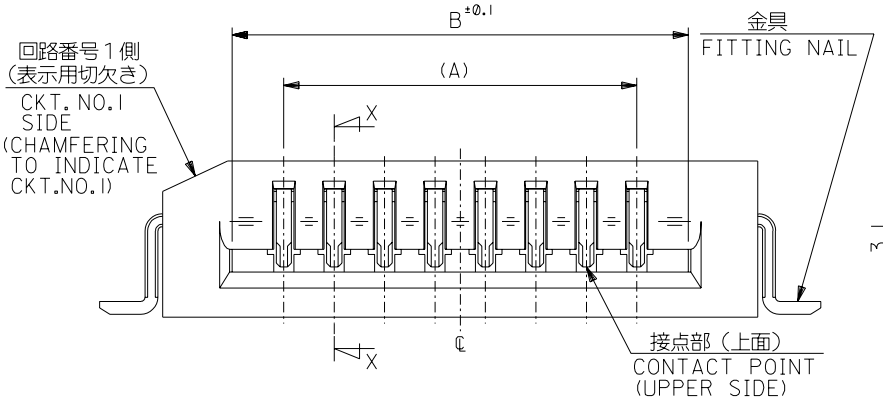

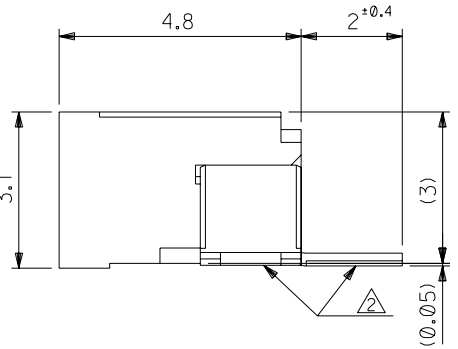

C	B	A	MATERIAL NO	極数 CIRCUIT
33.8	31.05	29	52793-3019	30
32.8	30.05	28	-2919	29
31.8	29.05	27	-2819	28
30.8	28.05	26	-2719	27
29.8	27.05	25	-2619	26
28.8	26.05	24	-2519	25
27.8	25.05	23	-2419	24
26.8	24.05	22	-2319	23
25.8	23.05	21	-2219	22
24.8	22.05	20	-2119	21
23.8	21.05	19	-2019	20
22.8	20.05	18	-1919	19
21.8	19.05	17	-1819	18
20.8	18.05	16	-1719	17
19.8	17.05	15	-1619	16
18.8	16.05	14	-1519	15
17.8	15.05	13	-1419	14
16.8	14.05	12	-1319	13
15.8	13.05	11	-1219	12
14.8	12.05	10	-1119	11
13.8	11.05	9	-1019	10
12.8	10.05	8	-0919	9
11.8	9.05	7	-0819	8
10.8	8.05	6	-0719	7
9.8	7.05	5	-0619	6
8.8	6.05	4	-0519	5
7.8	5.05	3	-0419	4
6.8	4.05	2	52793-0319	3

DO NOT SCALE DRAWING

	EC NO.	DRWN:	CH'K:	APPR:
	EC NO.	DRWN:	CH'K:	APPR:
	EC NO.	DRWN:	CH'K:	APPR:
	EC NO.	DRWN:	CH'K:	APPR:
REV	EC NO. J20041419	DRWN: H.KAWABATA '03/12/09	CH'K: K.TOJO '03/12/09	APPR: H. Sasao '03/12/09
	⓪	RELEASED		DESCRIPTION

MATERIAL 材料: 注記参照 SEE NOTES

FINISH 仕上げ:

WIRE RANGE 適用電線範囲:

INS. RANGE 被覆外径:

GENERAL TOLERANCES: (UNLESS SPECIFIED) 一般公差	
10 UNDER 未満	±0.2
10 OVER 以上 30 UNDER 未満	±0.25
30 OVER 以上	±0.3
ANGLE 角度	±3°

SCALE 10:1 | DESIGN UNITS ☒mm ☐INCH | THIRD ANGLE PROJECTION

DIMENSIONS: ☐mm/INCH ☐INCH/mm ☒mm ONLY | SHT | REV | REVISE ON CAD ONLY

DRAWN BY & DATE: H.KAWABATA '03/12/09

CHECKED BY & DATE: K.TOJO '03/12/09

APPROVED BY & DATE: H. Sasao '03/12/09

TITLE: 1.0 FFC CONN. NON ZIF SMT R/A (UPPER CONTACT) -LEAD FREE-

MOLEX INCORPORATED

CAD FILENAME: SD-52793-011.S01 | MATERIAL NO.: 52793-**19 | DRAWING NO.: SD-52793-011 | SHEET NO.: 1 OF 2

THIS DRAWING CONTAINS INFORMATION THAT IS PROPRIETARY TO MOLEX INCORPORATED AND SHOULD NOT BE USED WITHOUT WRITTEN PERMISSION.

SIZE B

SD-52793-011.S01

EN-02J(097) MXJ-54

DWG. NO. SD-52793-011

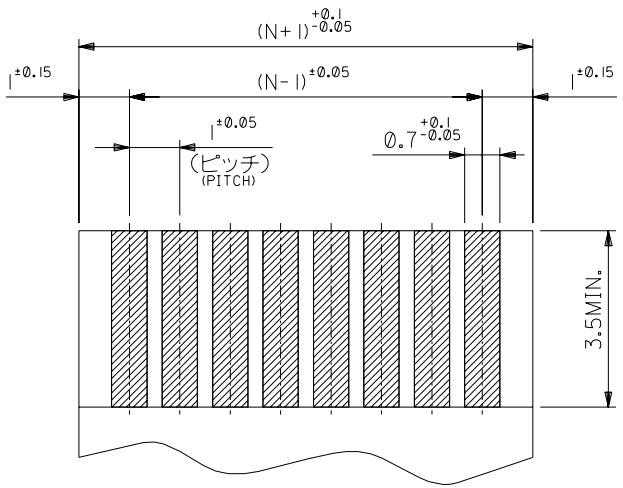

(仕上がり厚さ0.3±0.03 THICKNESS)

適合FPC推奨寸法

APPLICABLE FPC RECOMMENDED DIMENSION.

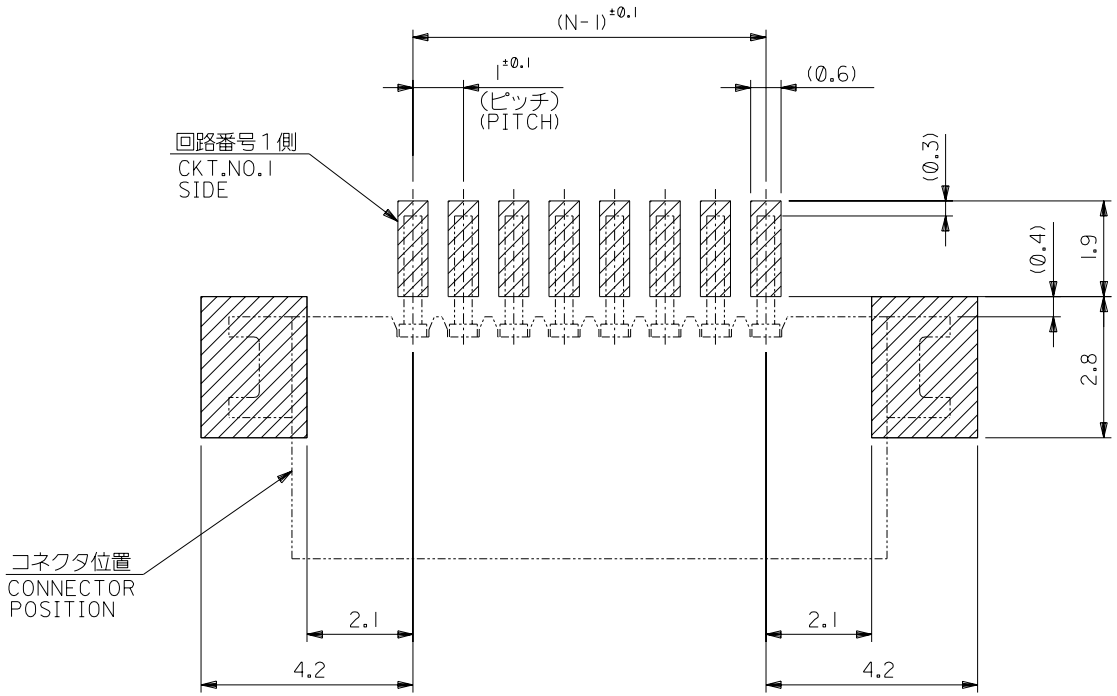

参考基板レイアウト（マウント面）

RECOMMENDED P.C.BOARD PATTERN DIMENSION.(REF.) (MOUNTING AREA)

注記 NOTES:

1. 使用材料 MATERIAL

ハウジング：	PPS,UL94V-0	HOUSING	:PPS, UL94V-0
ターミナル：	リン青銅 (t=0.25)	TERMINAL	:PHOSPHOR BRONZE
メッキ：	ニッケル下地錫ビスマスメッキ	PLATING	:Sn-Bi OVER Ni
金具：	リン青銅 (t=0.25)	FITTING NAIL	:PHOSPHOR BRONZE
メッキ：	ニッケル下地純錫メッキ	PLATING	:Sn OVER Ni

2. 基準面 E からのソルダーテールとフィッティングネイルの半田付け面のズレ量は、上方向に0.1MAX.下方向0.15MAX.とする。
MISALIGNMENT OF SOLDER TAIL AND FITTING NAIL FROM E : UPPER DIRECTION 0.1 MAX. , LOWER DIRECTION 0.15 MAX.

3. 偶数極に適用。
APPLY FOR EVEN CKT.

4. 本製品は 52793-**10 の鉛フリー品である。
THIS PRODUCT IS LEAD FREE OF 52793-**10

DO NOT SCALE DRAWING

EC NO.	DRWN:	CH'K:	APPR:	DESCRIPTION
				SEE SHEET 1 OF 2
				0

REV

MATERIAL 材料: 注記参照 SEE NOTES
FINISH 仕上げ
WIRE RANGE 適用電線範囲
INS. RANGE 被覆外径

GENERAL TOLERANCES: (UNLESS SPECIFIED) 一般公差	
10 UNDER 未満	±0.2
10 OVER 以上 30 UNDER 未満	±0.25
30 OVER 以上	±0.3
ANGLE 角度	±3°

SCALE 10:1 | DESIGN UNITS ☒mm ☐INCH | THIRD ANGLE PROJECTION | DIMENSIONS: ☐mm/INCH ☐INCH/mm ☒mm ONLY | SHT | REV: REVISE ON CAD ONLY

DRAWN BY & DATE: H.KAWABATA '03/12/09
CHECKED BY & DATE: K.TOJO '03/12/09
APPROVED BY & DATE: M. Sasao '03/12/09

TITLE: 1.0 FFC CONN. NON ZIF SMT R/A (UPPER CONTACT) -LEAD FREE-

molex MOLEX INCORPORATED

CAD FILENAME: SD-52793-011.S02
MATERIAL NO.: 52793-**19
DRAWING NO.: SD-52793-011
SHEET NO.: 2 OF 2
SIZE: B

THIS DRAWING CONTAINS INFORMATION THAT IS PROPRIETARY TO MOLEX INCORPORATED AND SHOULD NOT BE USED WITHOUT WRITTEN PERMISSION.

SD-52793-011.S02

EN-02J(097) MXJ-54

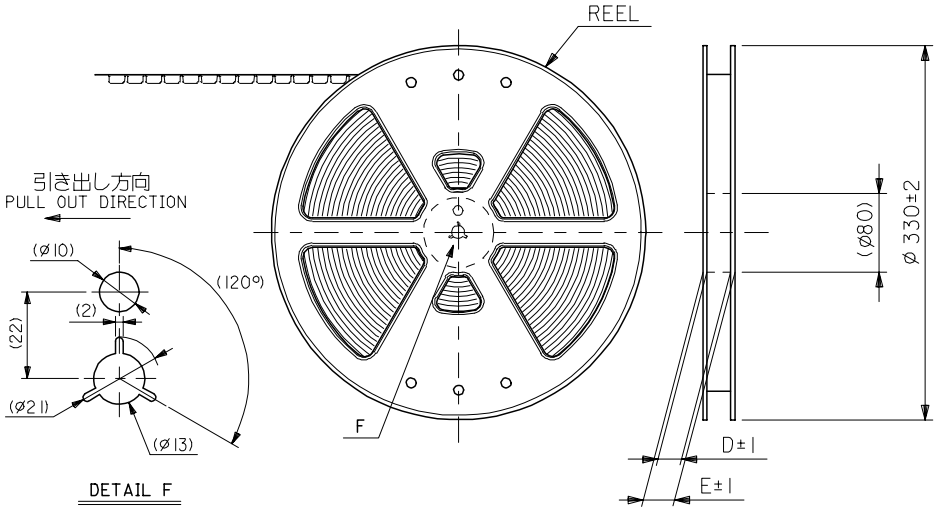

DETAIL F

NOTES

1. 製品詳細寸法については 製品単体図面 を参照下さい。
   RE DETAILED DIMENSION, SEE SALES DRAWING FOR CONNECTOR.
2. 梱包数量：１０００個／リール
   NUMBER OF CONNECTORS : 1000PCS/REEL
3. リードテープ長さ LEAD TAPE LENGTH

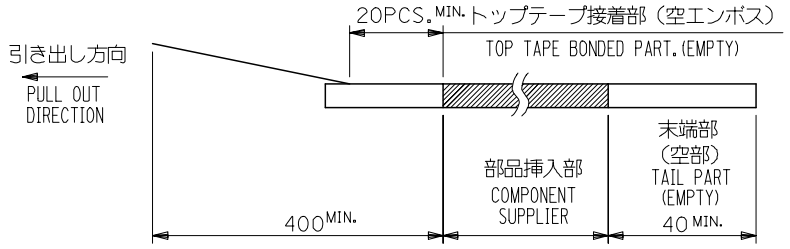

4. トップテープの剥離強度：0.1-1.3 N{10-130gf}（剥離方向は下図参照）
   尚、本規格値は出荷時に適用。（但し、輸送時に剥離が発生しないこと。）
   PEELING OFF FORCE OF TOP TAPE : 0.1-1.3 N{10-130gf}
   (PEELING DIRECTION AS SHOWN IN FOLLOWING FIG.)
   THIS REQUIREMENT SHOULD BE APPLIED AT SHIPMENT.
   PEEL OFF SHOULD NOT BE ALLOWED , DURING TRANSPORTATION.

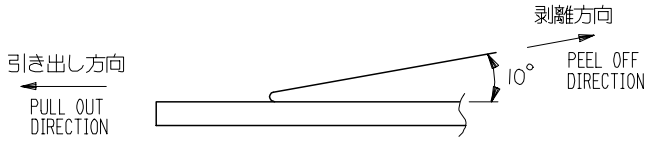

5. 材料(MATERIAL)
   キャリアテープ(CARRIER TAPE)：ポリプロピレン(POLYPROPYLENE)
   トップテープ(TOPTAPE)： PET , PE , PEF
   リール(REEL)：ポリスチレン（PS）<リサイクル材を含む>
   POLYSTYRENE(PS) <RECYCLE MATERIAL CONTAINED>
6. 本製品は 52793-**90 の鉛フリー品である。
   THIS PRODUCT IS LEAD FREE OF 52793-**90

52793-**70	MODEL NO.				
GENERAL TOLERANCES (UNLESS SPECIFIED)	DIMENSION STYLE: MM ONLY	SCALE: ---	DESIGN UNITS: METRIC	THIRD ANGLE PROJECTION	
10 UNDER ±0.2	DRAWN BY: M.NAGATA	DATE: '03/12/09	TITLE: 1.0 FFC CONN. NON ZIF SMT RA EMBSTP PKG -LEAD FREE-		
10 OVER 30 UNDER ±0.25	CHECKED BY: K.TOJO	DATE: '03/12/09			
30 OVER ±0.3	APPROVED BY: M.SASAO	DATE: '03/12/09	molex MOLEX INCORPORATED		
ANGULAR ±3 °	MATERIAL NO.: SEE CHART		DOCUMENT NO.: SD-52793-012	SHEET NO.: 1 OF 5	
DRAFT WHERE APPLICABLE MUST REMAIN WITHIN DIMENSIONS	SIZE: A3	THIS DRAWING CONTAINS INFORMATION THAT IS PROPRIETARY TO MOLEX INCORPORATED AND SHOULD NOT BE USED WITHOUT WRITTEN PERMISSION			

REVISED
EC NO: J2006-0384
DRWN:NAIDA 2005/08/08
CH'KD:KTOYODA 2005/08/09
APPR:NUKITA 2005/08/22
REV: B
DESCRIPTION

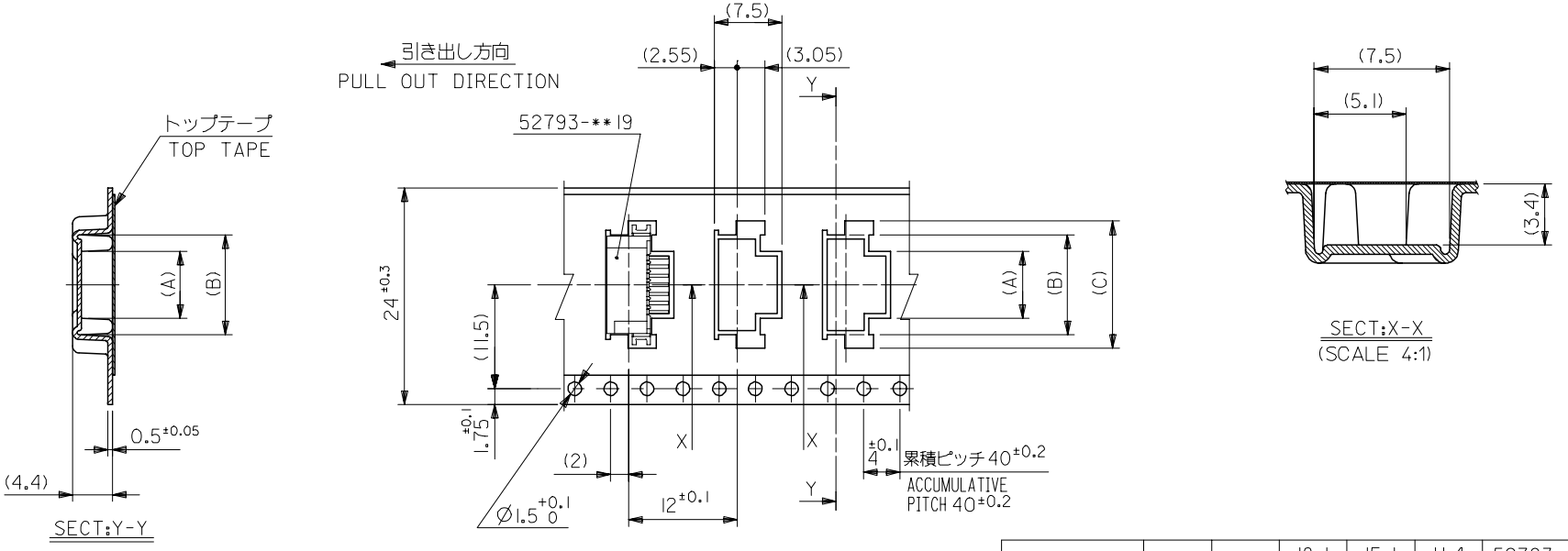

24mm幅キャリアテープ
24mm WIDTH CARRIER TAPE

キャリアテープ幅 CARRIER TAPE WIDTH	E	D	(C)	(B)	(A)	MATERIAL.NO.	極数 CKT.
24	29.4	25.4	18.1	15.1	11.4	52793-1170	11
			17.1	14.1	10.4	52793-1070	10
			16.1	13.1	9.4	52793-0970	9
			15.1	12.1	8.4	52793-0870	8
			14.1	11.1	7.4	52793-0770	7
			13.1	10.1	6.4	52793-0670	6
			12.1	9.1	5.4	52793-0570	5
			11.1	8.1	4.4	52793-0470	4
						52793-**70	MODEL.NO.

REVISED
EC NO: J2006-0384 2005/08/08
DRWN:NAIDA 2005/08/09
CHKD:KTOYODA
APPR:NUKITA 2005/08/22
DESCRIPTION
REV B

GENERAL TOLERANCES (UNLESS SPECIFIED)

10 UNDER	±0.2
10 OVER 30 UNDER	±0.25
30 OVER	±0.3
ANGULAR ±3 °	

DRAFT WHERE APPLICABLE MUST REMAIN WITHIN DIMENSIONS

DIMENSION STYLE: MM ONLY
SCALE: ---
DESIGN UNITS: METRIC
THIRD ANGLE PROJECTION

DRAWN BY: M.NAGATA DATE: '03/12/09
CHECKED BY: K.TOJO DATE: '03/12/09
APPROVED BY: M.SASAO DATE: '03/12/09
MATERIAL NO.: SEE CHART

TITLE: 1.0 FFC CONN. NON ZIF SMT RA EMBSTP PKG -LEAD FREE-

MOLEX INCORPORATED

DOCUMENT NO.: SD-52793-012
SHEET NO.: 2 OF 5

SIZE A3

THIS DRAWING CONTAINS INFORMATION THAT IS PROPRIETARY TO MOLEX INCORPORATED AND SHOULD NOT BE USED WITHOUT WRITTEN PERMISSION

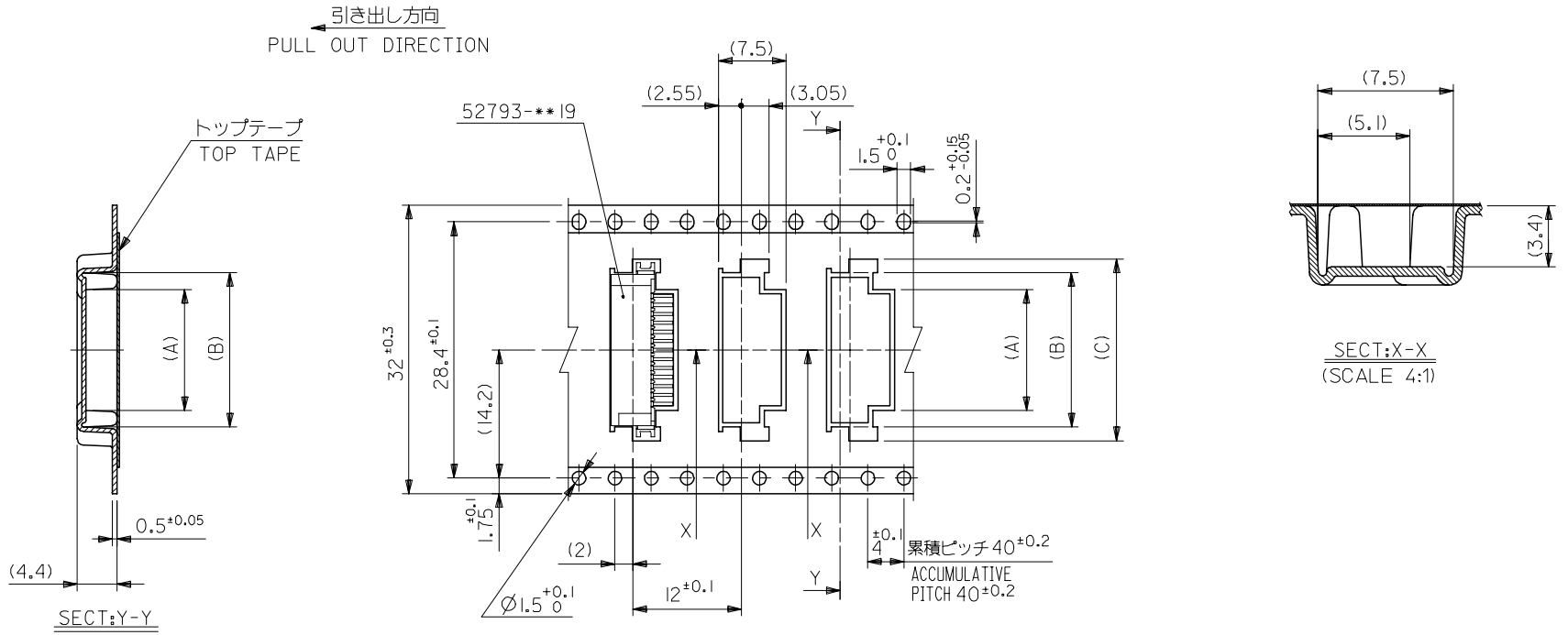

32mm幅キャリアテープ
32mm WIDTH CARRIER TAPE

キャリアテープ幅 CARRIER TAPE WIDTH	E	D	(C)	(B)	(A)	MATERIAL NO.	極数 CIRCUIT
32	37.4	33.4	23.1	20.1	16.4	52793-1670	16
			22.1	19.1	15.4	52793-1570	15
			21.1	18.1	14.4	52793-1470	14
			20.1	17.1	13.4	52793-1370	13
			19.1	16.1	12.4	52793-1270	12

52793-**70 MODEL.NO.

REVISED
EC NO: J2006-0384 2005/08/08
DRWN:NAIDA 2005/08/09
CHKD:KTOYODA
APPR:NUKITA 2005/08/22
DESCRIPTION
REV B

GENERAL TOLERANCES (UNLESS SPECIFIED)

10 UNDER	±0.2
10 OVER 30 UNDER	±0.25
30 OVER	±0.3
ANGULAR ±3 °	

DRAFT WHERE APPLICABLE MUST REMAIN WITHIN DIMENSIONS

DIMENSION STYLE: MM ONLY
SCALE: ---
DESIGN UNITS: METRIC
THIRD ANGLE PROJECTION

DRAWN BY: M.NAGATA DATE: '03/12/09
CHECKED BY: K.TOJO DATE: '03/12/09
APPROVED BY: M.SASAO DATE: '03/12/09

TITLE: 1.0 FFC CONN. NON ZIF SMT RA EMBSTP PKG -LEAD FREE-

MOLEX INCORPORATED

MATERIAL NO.: SEE CHART
DOCUMENT NO.: SD-52793-012
SHEET NO.: 3 OF 5

SIZE A3

THIS DRAWING CONTAINS INFORMATION THAT IS PROPRIETARY TO MOLEX INCORPORATED AND SHOULD NOT BE USED WITHOUT WRITTEN PERMISSION

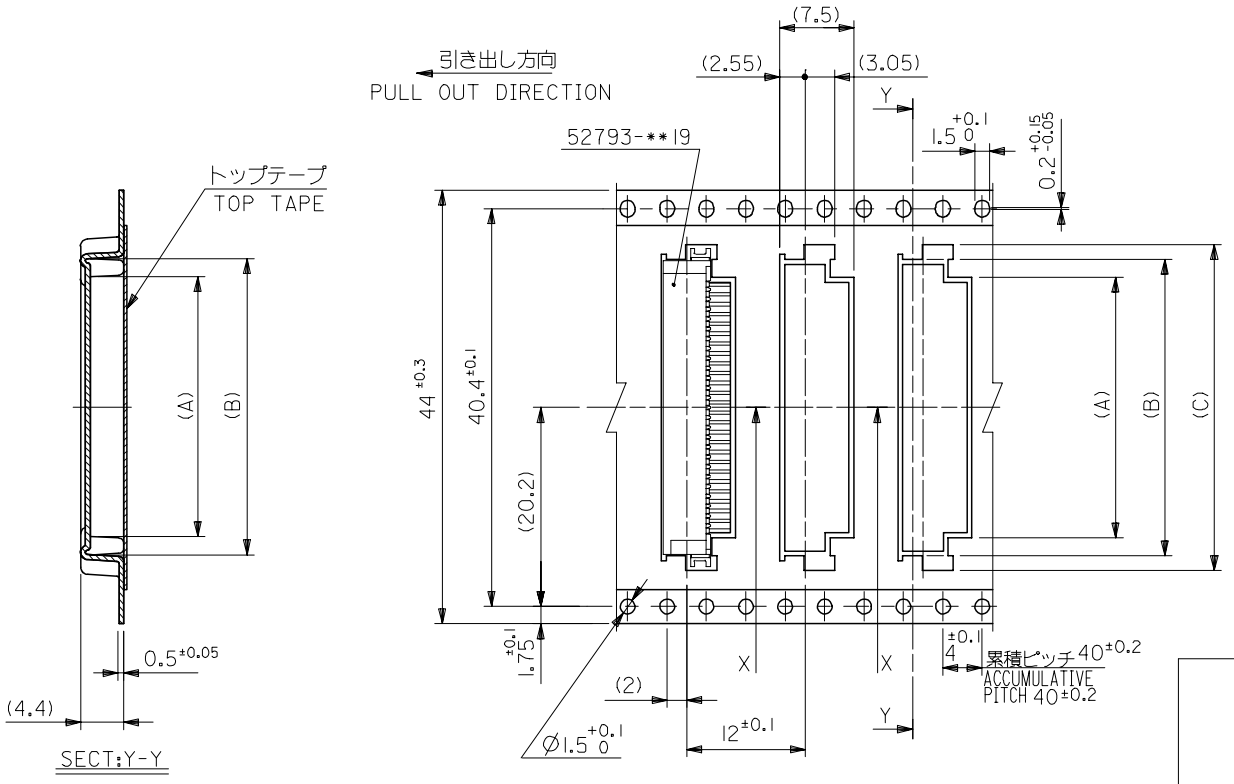

44mm幅キャリアテープ
44mm WIDTH CARRIER TAPE

キャリアテープ幅 CARRIER TAPE WIDTH	E	D	(C)	(B)	(A)	MATERIAL NO.	極数 CIRCUIT
44	49.4	45.4	34.1	31.1	27.4	52793-2770	27
			33.1	30.1	26.4	52793-2670	26
			32.1	29.1	25.4	52793-2570	25
			31.1	28.1	24.4	52793-2470	24
			30.1	27.1	23.4	52793-2370	23
			29.1	26.1	22.4	52793-2270	22
			28.1	25.1	21.4	52793-2170	21
			27.1	24.1	20.4	52793-2070	20
			26.1	23.1	19.4	52793-1970	19
			25.1	22.1	18.4	52793-1870	18
			24.1	21.1	17.4	52793-1770	17

52793-**70 MODEL.NO.

REVISED
EC NO: J2006-0384 2005/08/08
DRWN:NAIDA 2005/08/09
CHKD:KTOYODA
APPR:NUKITA 2005/08/22
DESCRIPTION
REV B

GENERAL TOLERANCES (UNLESS SPECIFIED)

10 UNDER	±0.2
10 OVER 30 UNDER	±0.25
30 OVER	±0.3
ANGULAR	±3 °

DRAFT WHERE APPLICABLE MUST REMAIN WITHIN DIMENSIONS

DIMENSION STYLE: MM ONLY
SCALE: ---
DESIGN UNITS: METRIC
THIRD ANGLE PROJECTION

DRAWN BY: M.NAGATA DATE: '03/12/09
CHECKED BY: K.TOJO DATE: '03/12/09
APPROVED BY: M.SASAO DATE: '03/12/09

TITLE: 1.0 FFC CONN. NON ZIF SMT RA EMBSTP PKG -LEAD FREE-

molex MOLEX INCORPORATED

MATERIAL NO.: SEE CHART
DOCUMENT NO.: SD-52793-012
SHEET NO.: 4 OF 5

SIZE A3

THIS DRAWING CONTAINS INFORMATION THAT IS PROPRIETARY TO MOLEX INCORPORATED AND SHOULD NOT BE USED WITHOUT WRITTEN PERMISSION

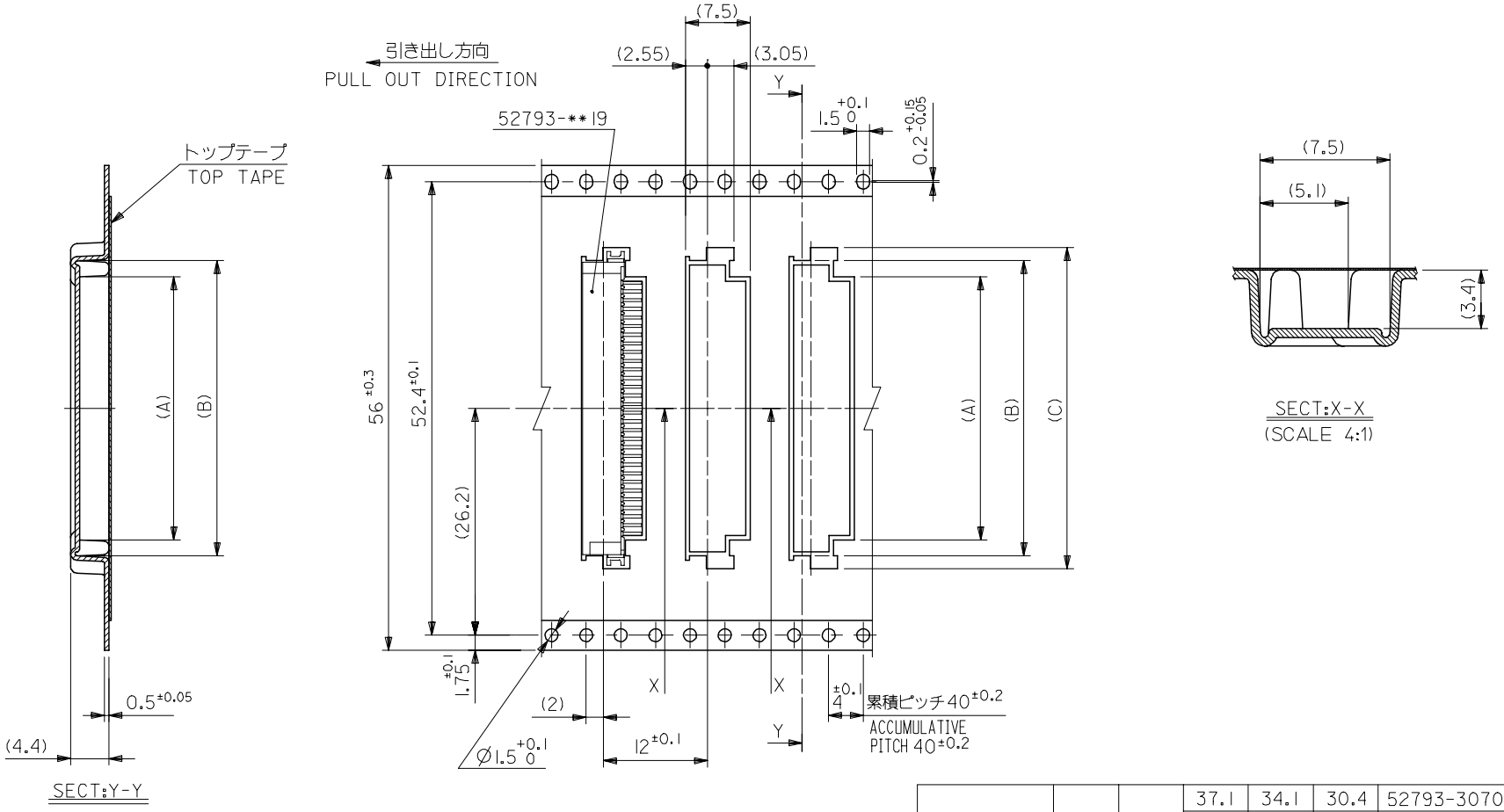

56mm幅キャリアテープ
56mm WIDTH CARRIER TAPE

キャリアテープ幅 CARRIER TAPE WIDTH	E	D	(C)	(B)	(A)	MATERIAL NO.	極数 CIRCUIT
56	61.4	57.4	37.1	34.1	30.4	52793-3070	30
			36.1	33.1	29.4	52793-2970	29
			35.1	32.1	28.4	52793-2870	28
						52793-**70	MODEL.NO.

REVISED
EC NO: J2006-0384 2005/08/08
DRWN:NAIDA 2005/08/09
CHKD:KTOYODA
APPR:NUKITA 2005/08/22
DESCRIPTION
REV B

GENERAL TOLERANCES (UNLESS SPECIFIED)

10 UNDER	±0.2
10 OVER 30 UNDER	±0.25
30 OVER	±0.3
ANGULAR	±3 °

DRAFT WHERE APPLICABLE MUST REMAIN WITHIN DIMENSIONS

DIMENSION STYLE: MM ONLY
SCALE: ---
DESIGN UNITS: METRIC
THIRD ANGLE PROJECTION

DRAWN BY: M.NAGATA DATE: '03/12/09
CHECKED BY: K.TOJO DATE: '03/12/09
APPROVED BY: M.SASAO DATE: '03/12/09

TITLE: 1.0 FFC CONN. NON ZIF SMT RA EMBSTP PKG -LEAD FREE-

MOLEX INCORPORATED

MATERIAL NO.: SEE CHART
DOCUMENT NO.: SD-52793-012
SHEET NO.: 5 OF 5

SIZE A3

THIS DRAWING CONTAINS INFORMATION THAT IS PROPRIETARY TO MOLEX INCORPORATED AND SHOULD NOT BE USED WITHOUT WRITTEN PERMISSION