This document was generated on 06/04/2010

PLEASE CHECK WWW.MOLEX.COM FOR LATEST PART INFORMATION

Part Number: 0520301629

Status: Active

Overview:

Description: 1.00mm (.039") Pitch FFC/FPC Connector, Through-Hole, Vertical, ZIF Receptacle, 16 Circuits, Lead-free

EU RoHS
ELV and RoHS Compliant
REACH SVHC
Not Reviewed
Halogen-Free Status
Not Reviewed

China RoHS

Need more information on product environmental compliance?

Email productcompliance@molex.com
For a multiple part number RoHS Certificate of Compliance, click here

Please visit the Contact Us section for any non-product compliance questions.

Search Parts in this Series
52030Series

General

Product Family	FFC/FPC Connectors
Series	52030
Overview	ffc_fpc_throughhole
Product Name	N/A

Physical

Circuits (Loaded)	16
Contact Position	N/A
Durability (mating cycles max)	30
Entry Angle	Vertical
Mated Height (in)	0.205 In
Mated Height (mm)	5.20 mm
Material - Metal	Phosphor Bronze
Material - Plating Mating	Tin-Bismuth
Material - Plating Termination	Tin-Bismuth
Material - Resin	Nylon, Polyester
Number of Rows	1
Orientation	Vertical
PC Tail Length (in)	0.126 In
PC Tail Length (mm)	3.20 mm
PCB Retention	Yes
PCB Thickness Recommended (in)	0.063 In
PCB Thickness Recommended (mm)	1.60 mm
Packaging Type	Tray
Pitch - Mating Interface (in)	0.039 In
Pitch - Mating Interface (mm)	1.00 mm
Polarized to PCB	No
Stackable	No
Temperature Range - Operating	-20°C to +80°C
Termination Interface: Style	Through Hole
Wire/Cable Type	FFC/FPC

Electrical

Current - Maximum per Contact	1A
Voltage - Maximum	50V

Material Info

Reference - Drawing Numbers

Packaging Specification	SPK-52030-001
Product Specification	PS-52030-004, RPS-52030-003, RPS-52030-004, RPS-52030-005, RPS-52030-006, RPS-52030-017, RPS-52030-018, RPS-52030-019, RPS-52030-020, RPS-52030-021, RPS-52030-022, RPS-52030-023
Sales Drawing	SD-52030-017

This document was generated on 06/04/2010

PLEASE CHECK WWW.MOLEX.COM FOR LATEST PART INFORMATION

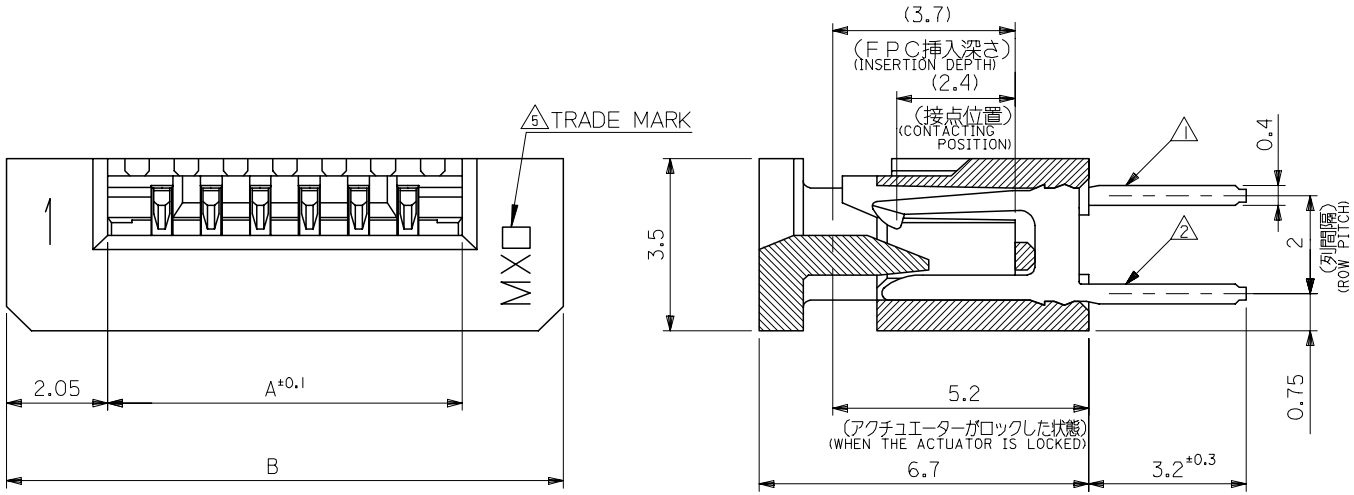

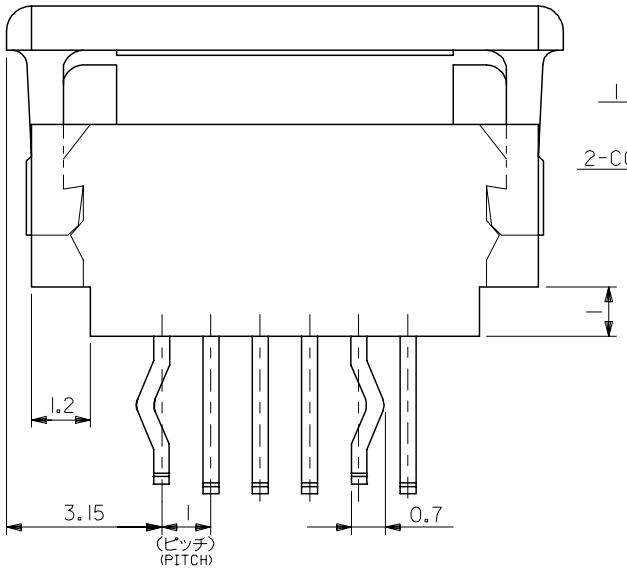

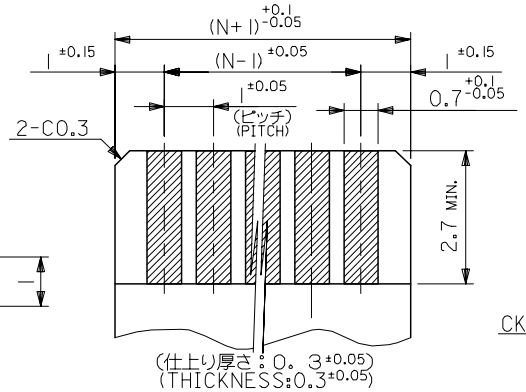

適合FPC推奨寸法
APPLICABLE FPC
RECOMMENDED DIM.

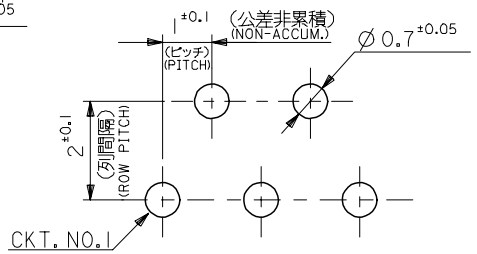

基板取付穴推奨寸法 (t=1.6)
RECOMMENDED P.C.BOARD
HOLE DIMENSIONS (t=1.6)
(マウント面)
(MOUNT SURFACE)

5 TRADE MARK
MADE IN JAPAN:MXJ
MADE IN MALAYSIA:MXL

FPCについて:
打抜き方向は導体側から補強板側を推奨致します。
補強フィルム材質はポリイミドを推奨致します。
接着剤は熱硬化接着剤を推奨致します。

ABOUT FPC:
RECOMMENDED PUNCHER DIRECTION :FORM CONDUCTOR SIDE TO STIFFENER BOARD SIDE.
RECOMMENDED MATERIAL :
STIFFENER FILM : POLYIMIDE
BONDING AGENT : THEROSETTING BONDING AGENT

35.3	31.2	52030-3029	30
34.3	30.2	-2929	29
33.3	29.2	-2829	28
32.3	28.2	-2729	27
31.3	27.2	-2629	26
30.3	26.2	-2529	25
29.3	25.2	-2429	24
28.3	24.2	-2329	23
27.3	23.2	-2229	22
26.3	22.2	-2129	21
25.3	21.2	-2029	20
24.3	20.2	-1929	19
23.3	19.2	-1829	18
22.3	18.2	-1729	17
21.3	17.2	-1629	16
20.3	16.2	-1529	15
19.3	15.2	-1429	14
18.3	14.2	-1329	13
17.3	13.2	-1229	12
16.3	12.2	-1129	11
15.3	11.2	-1029	10
14.3	10.2	-0929	9
13.3	9.2	-0829	8
12.3	8.2	-0729	7
11.3	7.2	-0629	6
10.3	6.2	-0529	5
9.3	5.2	-0429	4
8.3	4.2	52030-0329	3
B	A	MATERIAL NO.	極数 CKT.

MODEL NO. 52030-**29

注記:
NOTES:
1. CKT. NO. 1を基準に偶数番目のソルダーテール。
EVEN NUMBER SOLDER TAIL.
2. CKT. NO. 1を基準に奇数番目のソルダーテール。
ODD NUMBER SOLDER TAIL.
3. 材 料:
MATERIAL:
ターミナル:リン青銅、ニッケル下地 錫ビスマスメッキ (t=0.32)
TERMINAL: PHOSPHOR BRONZE,TIN-BISMUTH OVER NICKEL PLATING.(t=0.32)
ハウジング:66ナイロン, UL94V-0
HOUSING: 66NYLON,UL94V-0
アクチュエーター:ポリエステル, UL94V-0
ACTUATOR: POLYESTER,UL94V-0
4. 本製品は52030-**10の鉛フリー品である。
THIS PRODUCT IS LEAD FREE OF 52030-**10.

REVISED
EC NO: J2008-1613
DRWN:YAOYAGI 2007/10/30
CHKD:THARUYAMA 2007/10/30
APPR:NUKITA 2007/10/30
DESCRIPTION
REV B

GENERAL TOLERANCES (UNLESS SPECIFIED)

10 UNDER	±0.2
10 OVER 30 UNDER	±0.25
30 OVER	±0.3
ANGULAR ±3 °	

DRAFT WHERE APPLICABLE MUST REMAIN WITHIN DIMENSIONS

DIMENSION STYLE	MM ONLY
SCALE	10:1
DESIGN UNITS	METRIC
	THIRD ANGLE PROJECTION
DRAWN BY / DATE	YWADA '04/03/29
CHECKED BY / DATE	MSASAO '04/03/29
APPROVED BY / DATE	MSASAO '04/03/29
MATERIAL NO.	SEE TABLE
TITLE	1.0 FPC CONN ZIF ST -LEAD FREE-
	MOLEX INCORPORATED
DOCUMENT NO.	SD-52030-017
SHEET NO.	1 OF 1
SIZE	A3

THIS DRAWING CONTAINS INFORMATION THAT IS PROPRIETARY TO MOLEX INCORPORATED AND SHOULD NOT BE USED WITHOUT WRITTEN PERMISSION