SHEET 1 OF 1

▲

| SWITCH FUNCTION | |
|---|---|
| POS. 1 | POS. 2 |
|  |  |
| OFF | (ON) |
| OPEN | 1-2 |

(ON) = MOMENTARY

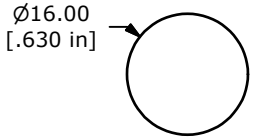


PANEL CUTOUT
MAX. PANEL THICKNESS 6.0mm

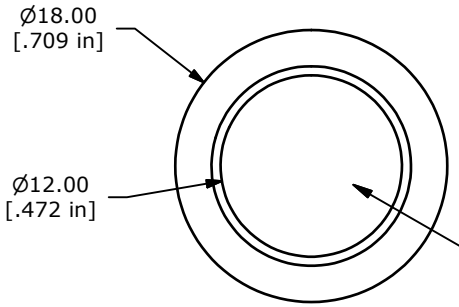


▲ DOMED ACTUATOR
NICKEL PLATED FINISH

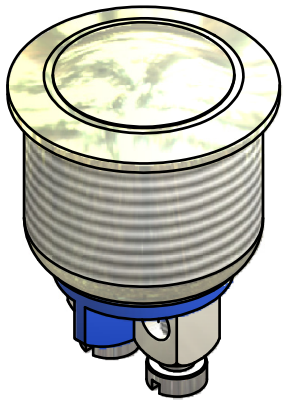

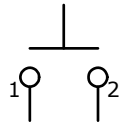


CIRCUIT: SPST

▲ BODY FINISH
NICKEL PLATED FINISH

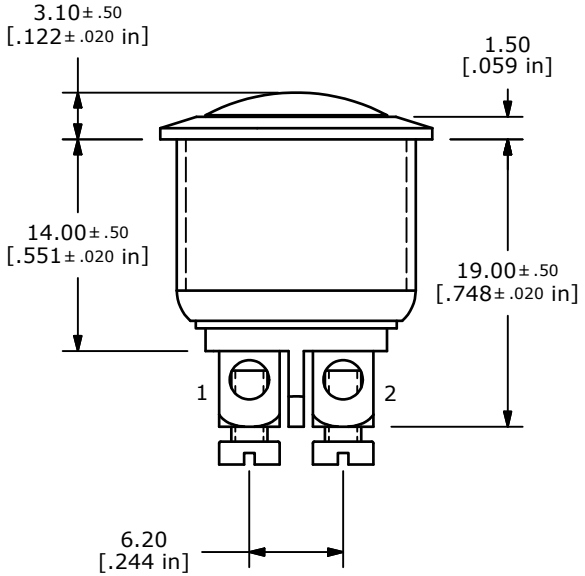


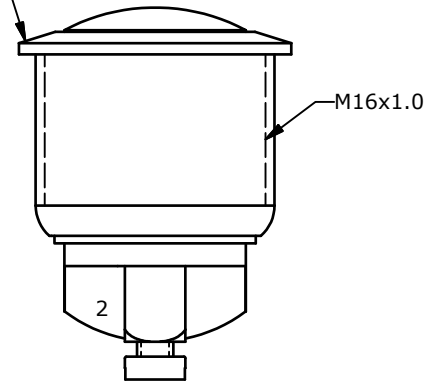


NOTE:
1. ALL DIMENSIONS IN MM [INCH]
2. GENERAL TOLERANCE: X.X=±0.4
   X.XX=±0.25
3. TERMINAL NUMBERS FOR REF ONLY
4. CONTACT MATERIAL: SILVER
5. RATING: 2A 48VDC
▲6: TRAVEL: 1.5 ± 0.2mm
7. ELECTRIC LIFE: 200,000 MAKE-AND-BREAK CYCLES
8. INSULATION RESISTANCE: 1,000 MΩ MIN.
9. DIELECTRIC STRENGTH: 2,000 VAC MIN. FOR 1 MINUTE
10. CONTACT RESISTANCE: 50mΩ MAX. @ 1A 12VDC
11. OPERATING TEMP.: -20°C to 55°C
12. ▲ DENOTES CRITICAL PARAMETER.
13. INGRESS PROTECTION: IP65
▲14. HARDWARE SUPPLIED: O-RING AND HEXNUT
15. 2002/95/EC (ROHS) COMPLIANT

| REV | PCR NO | DESCRIPTION | DATE | BY |
|---|---|---|---|---|
| C | 20390 | REVISED AND REDRAWN | 1/9/12 | BGL |

*THE INFORMATION CONTAINED IN THIS DOCUMENT IS PROPRIETARY TO E-SWITCH AND IS NOT TO BE COPIED OR TRANSFERRED*

E•SWITCH®

TITLE PV2S640NN

| SCALE | DATE | DR | DWG | REV |
|---|---|---|---|---|
| 2:1 | 12/29/2011 | BGL | 52-PV2S640NN | C |