SHEET 1 OF 1

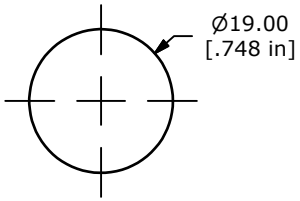

PANEL MOUNTING
MAX. PANEL THICKNESS 8.0mm

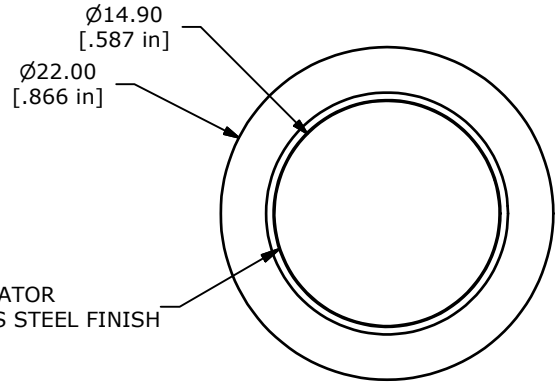

▲FLAT ACTUATOR
BRUSHED STAINLESS STEEL FINISH

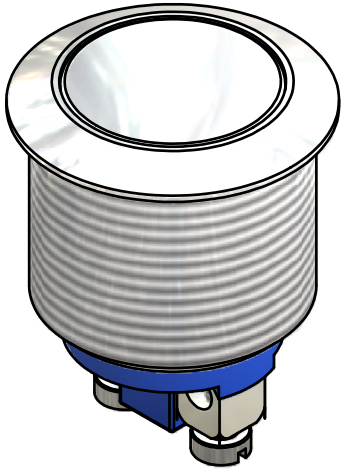

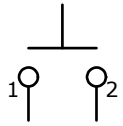

▲CIRCUIT: SPST

▲ SWITCH FUNCTION	
POS. 1	POS. 2
OFF	(ON)
OPEN	1-2

(ON) = MOMENTARY

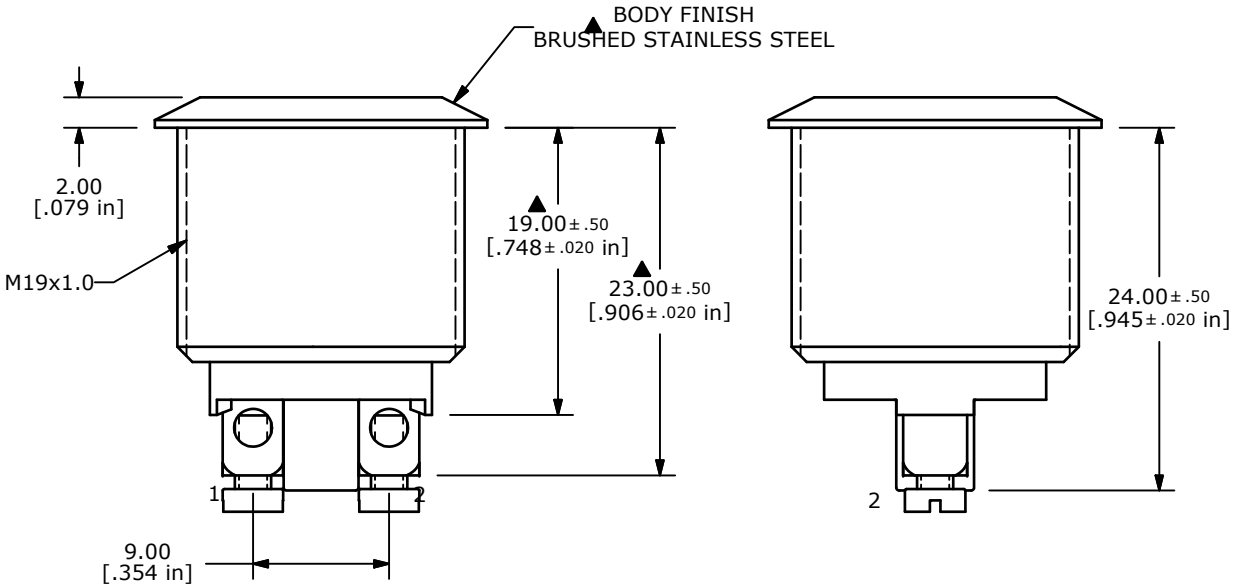

NOTE:
1. ALL DIMENSIONS IN MM [INCH]
2. GENERAL TOLERANCE: X.X = ± 0.4
   X.XX = ± 0.25
3. TERMINAL NOS. FOR REF. ONLY
▲4. FUNCTION: SPST
▲5. RATING: 2A @ 48VDC
6. CONTACT RESISTANCE: 50mΩ MAX. @ 1A 12VDC
7. INSULATION RESISTANCE: 1,000MΩ @ 500VDC
8. DIELECTRIC STRENGTH: 2,000VAC MIN. FOR 1 MINUTE
9. ELECTRICAL LIFE: 200,000 CYCLES
10. CONTACT MATERIAL: SILVER PLATED COPPER
11. OPERATING TEMPERATURE: -20°C TO 55°C
12. INGRESS PROTECTION: IP65
13. ▲DENOTES CRITICAL PARAMETER
14. 2002/95/EC (ROHS) COMPLIANT
▲15. HARDWARE INCLUDED: HEX NUT AND O-RING (NOT SHOWN)

REV	PCR NO	DESCRIPTION	DATE	BY
B	20340	CORRECT TEMP RATING AND CONVERT	12/19/11	BMA

THE INFORMATION CONTAINED IN THIS DOCUMENT IS PROPRIETARY TO E-SWITCH AND IS NOT TO BE COPIED OR TRANSFERRED

E•SWITCH®

TITLE PV1F640BB

SCALE	DATE	DR	DWG	REV
2:1	12/19/2011	BMA	52-PV1F640BB	B