Littelfuse

Clip / No. 520 lead free

PC Mount, 5x20mm Fuses

RoHS

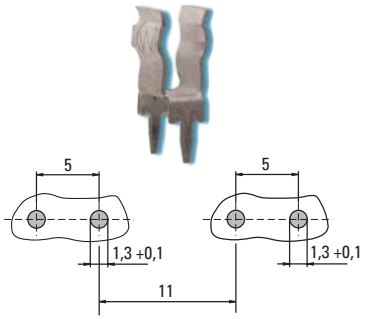

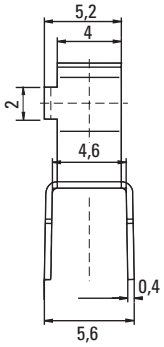

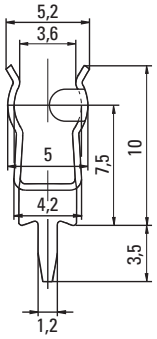

Specifications

Mounting
PC Board, 5mm pin spacing
Solder pins 0.4 x 1.2mm

Materials
Clip: Copper alloy
Solderable, tinned

Electrical Data (23°C)
Rated Voltage: 250V
Max. Current/Power: 6.3A/2.5W

Minimum Cross Section
Conducting path - 0.2mm²

Solderability
235°C, 2 sec. (IEC 60068-2-20)

Soldering Heat Resistance
260°C, 10 sec. (IEC 60068-2-20)

Unit Weight
0.4g

Packaging
Bulk (5000 pcs.)

Order Number
Clip No. 520 0000 100

Clip / No. 521 lead free

PC Mount, 5x20mm Fuses 90° Pin Shift

RoHS

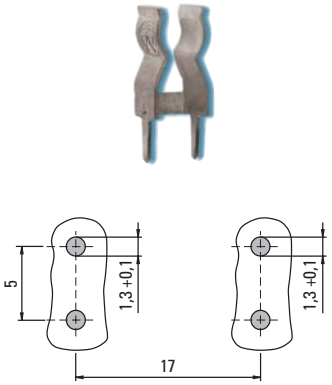

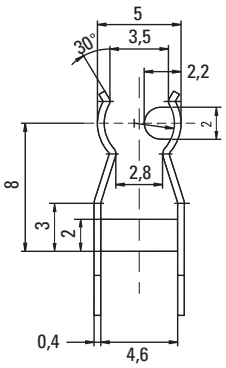

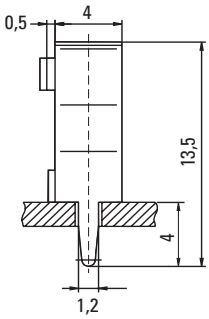

Mounting
PC Board, 5mm pin spacing
Solder pins 0.4 x 1.2mm

Materials
Clip: Copper alloy
Solderable, tinned

Electrical Data (23°C)
Rated Voltage: 250V
Max. Current/Power: 6.3A/2.5W

Minimum Cross Section
Conducting path - 0.2mm²

Solderability
235°C, 2 sec. (IEC 60068-2-20)

Soldering Heat Resistance
260°C, 10 sec. (IEC 60068-2-20)

Unit Weight
0.4g

Packaging
Bulk (5000 pcs.)

Order Number
Clip No. 521 0000 100

Clip / No. 519 lead free

PC Mount, 5x20mm Fuses Taped

RoHS

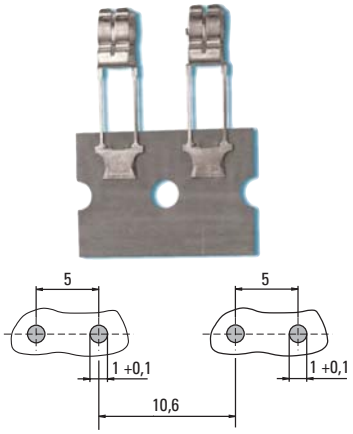

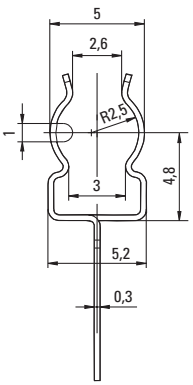

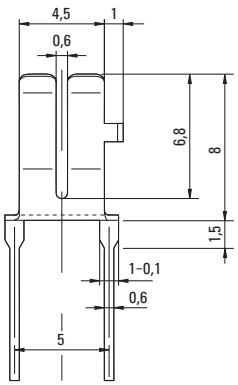

Mounting
PC Board, 5mm pin spacing
Solder pins 0.3 x 0.5mm

Materials
Clip: Copper alloy
Solderable, tinned

Electrical Data (23°C)
Rated Voltage: 250V
Max. Current/Power: 2.5A/1W

Minimum Cross Section
Conducting path - 0.2mm²

Solderability
235°C, 2 sec. (IEC 60068-2-20)

Soldering Heat Resistance
260°C, 10 sec. (IEC 60068-2-20)

Unit Weight
0.5g

Packaging
Tape/Reel (1000 pcs.)

Order Number
Clip No. 519 0000 100

Note: 1.00 means the number one with two decimal places. 1,000 means the number one thousand.

Specifications are subject to change without notice.

WICKMANN

In our continuing strategy to deliver unparalleled circuit protection solutions, technical expertise and application leadership, we proudly introduce the WICKMANN Group and its products to the Littelfuse portfolio.