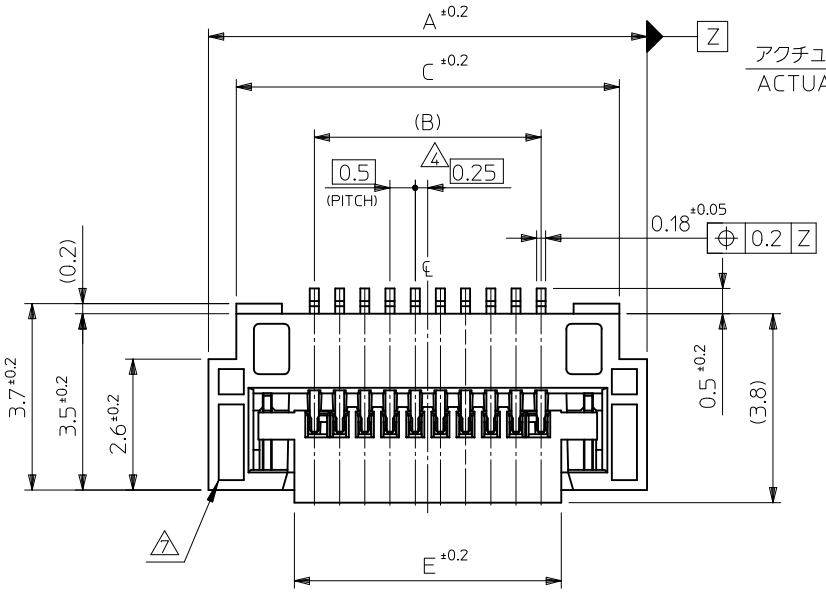

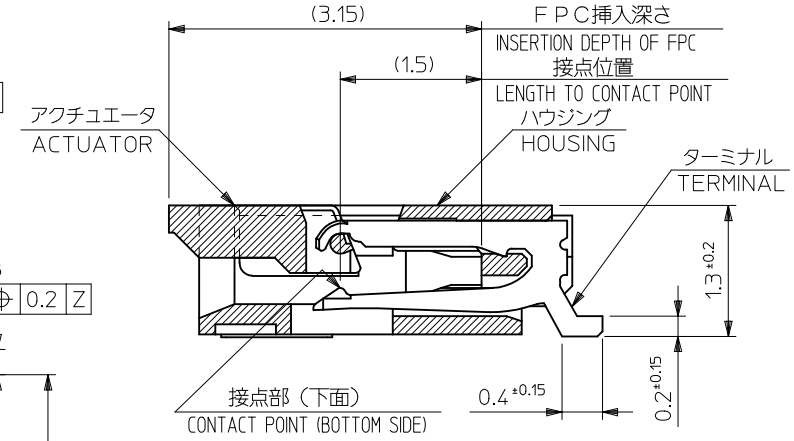

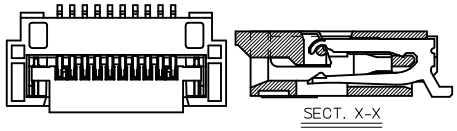

-30極以上-
30 Ckt. OR MORE

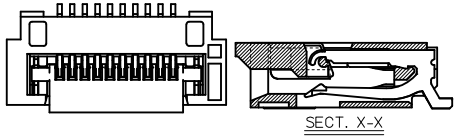

-29極以下-
29 Ckt. OR LESS

△7 SECT. X-X

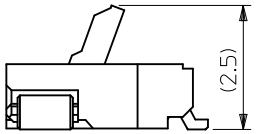

△7 外観形状
APPEARANCE FORM

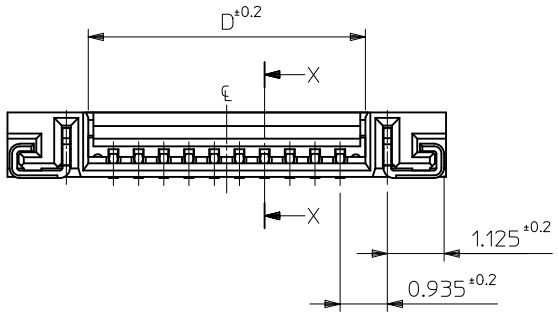

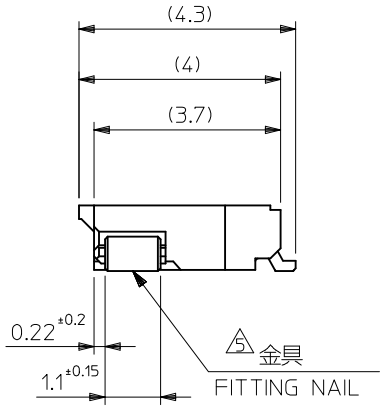

（アクチュエータが開口した状態）
(WHEN ACTUATOR IS OPENED)

E	D	C	B	A	EMBOSSED TAPE ORDER No. オーダー番号	製品番号 MATERIAL No. MODEL No. 51296-**51	極数 Ckt
30.3	30.5	32.6	29.5	33.7	51296-6094	51296-6051	60
27.3	27.5	29.6	26.5	30.7	51296-5494	51296-5451	54
25.3	25.5	27.6	24.5	28.7	51296-5094	51296-5051	50
22.8	23.0	25.1	22.0	26.2	51296-4594	51296-4551	45
20.3	20.5	22.6	19.5	23.7	51296-4094	51296-4051	40
17.3	17.5	19.6	16.5	20.7	51296-3494	51296-3451	34
9.3	9.5	11.6	8.5	12.7	51296-1894	51296-1851	18
7.3	7.5	9.6	6.5	10.7	51296-1494	51296-1451	14
6.3	6.5	8.6	5.5	9.7	51296-1294	51296-1251	12
4.3	4.5	6.6	3.5	7.7	51296-0894	51296-0851	8

REVISED
EC NO: J2011-0996 2010/11/01
DRWN:KOMURAKAMI
CH'KD:
APPR:KMORIKAWA 2011/02/15
DESCRIPTION
REV G

GENERAL TOLERANCES (UNLESS SPECIFIED)

10 UNDER	±0.2
10 OVER 30 UNDER	±0.25
30 OVER	±0.3
ANGULAR	±1 °

DRAFT WHERE APPLICABLE MUST REMAIN WITHIN DIMENSIONS

DIMENSION STYLE: MM ONLY
SCALE: ---
DESIGN UNITS: METRIC
THIRD ANGLE PROJECTION

DRAWN BY: M.UMEDA DATE: 2005/02/22
CHECKED BY: KEN.SUZUKI DATE: 2005/02/22
APPROVED BY: N.UKITA DATE: 2005/02/22

TITLE: 0.5 FPC CONN ZIF E/O HSG ASSY (HGT=1.3) -LEAD FREE-

MOLEX INCORPORATED

MATERIAL NO.: SEE TABLE
DOCUMENT NO.: SD-51296-011
SHEET NO.: 1 OF 2

SIZE A3

THIS DRAWING CONTAINS INFORMATION THAT IS PROPRIETARY TO MOLEX INCORPORATED AND SHOULD NOT BE USED WITHOUT WRITTEN PERMISSION

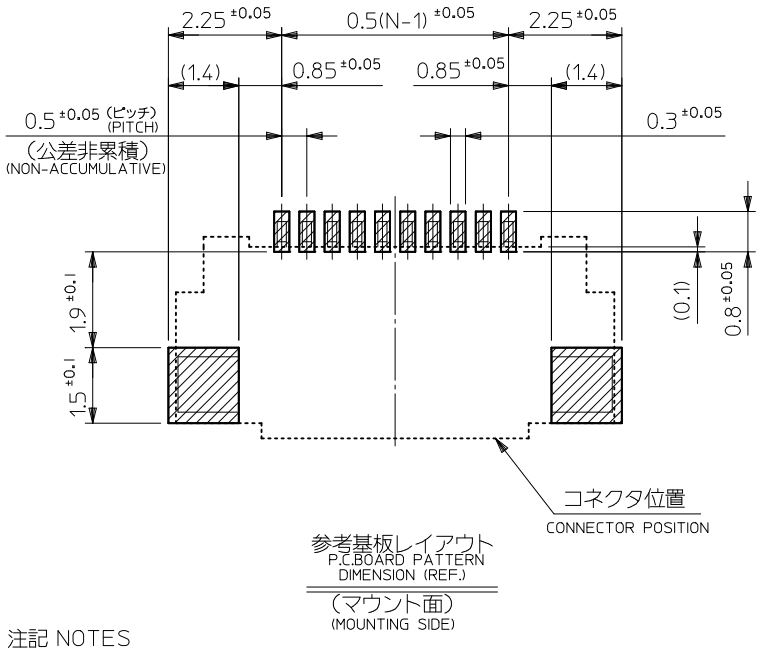

参考基板レイアウト
P.C.BOARD PATTERN DIMENSION (REF.)
(マウント面)
(MOUNTING SIDE)

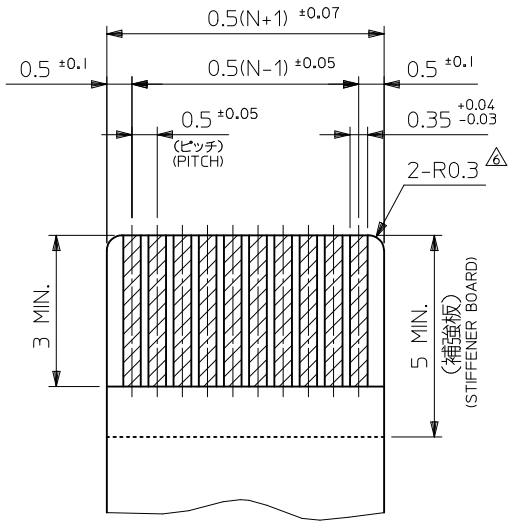

適合ＦＰＣ推奨寸法
APPLICABLE FPC RECOMMENDED DIMENSION
(仕上がり厚さ：0.3 ±0.05)
(THICKNESS:0.3 ±0.05)

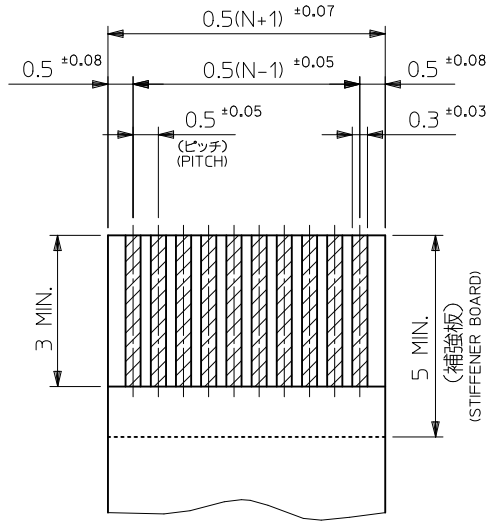

適合ＦＦＣ推奨寸法
APPLICABLE FFC RECOMMENDED DIMENSION
(仕上がり厚さ：0.3 ±0.05)
(THICKNESS:0.3 ±0.05)

注記 NOTES

1. 使用材料 MATERIAL

ハウジング HOUSING	：液晶ポリマー ガラス充填, UL94V-0 （ベージュ）	LIQUID CRYSTAL POLYMER GLASS FILLED, UL94V-0 (BEIGE)
アクチュエータ ACTUATOR	：ポリアミド9T ガラス充填, UL94V-0（黒）	POLYAMIDE 9T GLASS FILLED, UL94V-0 (BLACK)
ターミナル TERMINAL	：リン青銅（t＝0．18）	PHOSPOR BRONZE
金具 FITTING NAIL	：リン青銅（t＝0．15）	PHOSPOR BRONZE

2. メッキ仕様 PLATING

ターミナル TERMINAL
コンタクト部：金メッキ 0.1マイクロメートル以上
CONTACT AREA ： GOLD 0.1 MICROMETER MINIMUM
テール部：金メッキ 0.05マイクロメートル以上
TAIL AREA ： GOLD 0.05 MICROMETER MINIMUM
下地メッキ：ニッケルメッキ 1.0マイクロメートル以上
UNDER PLATING ： NICKEL 1.0 MICROMETER MINIMUM

金具 FITTING NAIL
錫メッキ 1.0マイクロメートル以上
TIN 1.0 MICROMETER MINIMUM
下地メッキ：ニッケルメッキ 1.0マイクロメートル以上
UNDER PLATING ： NICKEL 1.0 MICROMETER MINIMUM

3. エンボステープ梱包時は、アクチュエータが閉じた状態とする。
IN THE PACKAGE,ACTUATOR OF PART NO.51296-**51 SHOULD BE CLOSED.

⚠4 偶数極に適用。
APPLY FOR EVEN CIRCUIT.

⚠5 パターンはくり止め用金具
FITTING NAIL FOR PREVENTION OF PEELING OF PCB PATTERN.

⚠6 R0.3は、FPC導体部にかからないこと。
R0.3 MUST NOT BE OVERLAPPED TO PATTERN OF FPC.

⚠7 極数によりハウジング形状が異なるので注意のこと。
THE HOUSING SHAPE IS DIFFERENT ACCORDING TO THE CIRCUIT.

ＦＰＣ／ＦＦＣについて：
打抜き方向は導体側から補強板側を推奨いたします。
導体部については軟銅箔３５マイクロメーターまたは５０マイクロメーターを推奨致します。
ABOUT FPC/FFC
RECOMMENDED PUNCHER DIRECTION : FROM CONDUCTOR SIDE TO STIFFENER FILM SIDE.
RECOMMENDED CONDUCTOR SPEC :
THICKNESS OF SOFT COPPER FOIL : 35 MICROMETER OR 50 MICROMETER

ＦＰＣについて：
補強フィルム材質はポリイミドを推奨します。
接着剤は熱硬化接着剤を推奨します。
ABOUT FPC
RECOMMENDED MATERIAL :
STIFFENER FILM : POLYIMIDE
BONDING AGENT : THERMOSETTING BONDING AGENT

REVISED	EC NO:	DRWN:	CH'KD:	APPR:	DESCRIPTION	REV
	J2011-0996	KOMURAKAMI 2010/11/01		KMORIKAWA 2011/02/15		G

GENERAL TOLERANCES (UNLESS SPECIFIED)

10 UNDER	±0.2
10 OVER 30 UNDER	±0.25
30 OVER	±0.3
ANGULAR	±1 °

DRAFT WHERE APPLICABLE MUST REMAIN WITHIN DIMENSIONS

DIMENSION STYLE	MM ONLY
SCALE	---
DESIGN UNITS	METRIC
DRAWN BY / DATE	M.UMEDA 2005/02/22
CHECKED BY / DATE	KEN.SUZUKI 2005/02/22
APPROVED BY / DATE	N.UKITA 2005/02/22
MATERIAL NO.	SEE TABLE
51296-**51	MODEL No.
THIRD ANGLE PROJECTION	
TITLE	0.5 FPC CONN ZIF E/O HSG ASSY (HGT=1.3) -LEAD FREE-
MOLEX INCORPORATED	
DOCUMENT NO.	SD-51296-011
SHEET NO.	2 OF 2
SIZE	A3

THIS DRAWING CONTAINS INFORMATION THAT IS PROPRIETARY TO MOLEX INCORPORATED AND SHOULD NOT BE USED WITHOUT WRITTEN PERMISSION

CONFIDENTIAL

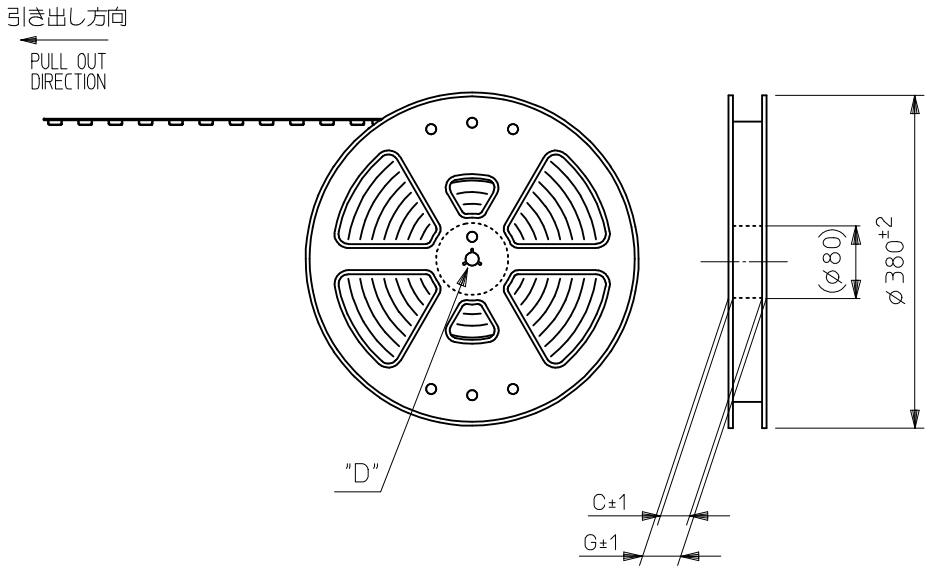

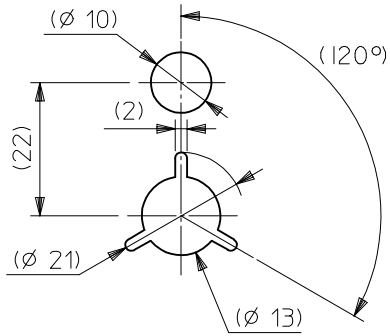

DETAIL "D"

NOTES

1. 製品詳細寸法は製品単体図面を参照して下さい。
   FOR DETAIL OF CONNECTOR DIMENSIONS, PLEASE SEE THE DRAWING OF CONNECTOR ITSELF (NOT PACKAGED).
2. 梱包数量：３０００個／リール
   NUMBER OF CONNECTORS : 3000PCS/REEL
3. リードテープ長さ LEAD TAPE LENGTH

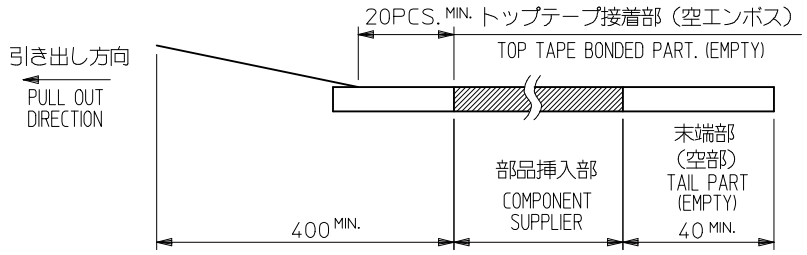

4. トップテープの剥離強度：0.1N～1.3N(10gf～130gf)
   （剥離方向は下図参照）
   尚、本規格値は出荷時に適用。（但し、輸送時に剥離が発生しないこと。）
   PEELING OFF FORCE OF TOP TAPE : 0.1N～1.3N(10gf～130gf)
   (PEELING DIRECTION AS SHOWN IN FOLLOWING FIG.)
   THIS REQUIREMENT SHOULD BE APPLIED AT SHIPMENT.
   PEEL OFF SHOULD NOT BE ALLOWED , DURING TRANSPORTATION.

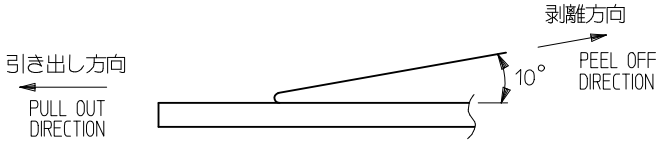

5. 材料(MATERIAL)
   キャリアテープ(CARRIER TAPE) :ポリプロピレン(POLYPROPYLENE)
   トップテープ (TOPTAPE) : PET, PE, PEF
   リール(REEL): ポリスチレン(PS)くリサイクル材を含む〉
   POLYSTYRENE (PS) <RECYCLE MATERIAL CONTAINED>

REVISED			REV
EC NO: J2009-0892			
DRWN:MTAKAHASHI	03 2008/10/14		
CH'KD:THARUYAMA	2008/10/14		
APPR:NUKITA	2008/10/14	DESCRIPTION	

GENERAL TOLERANCES (UNLESS SPECIFIED)	
10 UNDER	±0.2
10 OVER 30 UNDER	±0.25
30 OVER	±0.3
ANGULAR ±1 °	

DRAFT WHERE APPLICABLE MUST REMAIN WITHIN DIMENSIONS

DIMENSION STYLE	MM ONLY
SCALE	---
DESIGN UNITS	METRIC
	THIRD ANGLE PROJECTION
DRAWN BY / DATE	M.UMEDA 2005/02/23
CHECKED BY / DATE	KEN.SUZUKI 2005/02/23
APPROVED BY / DATE	N.UKITA 2005/02/23
MATERIAL NO.	SEE CHART
MODEL NO.	51296-**94
TITLE	0.5 FPC CONN EASY ON HGT=1.3MM EMBSTP PKG
	MOLEX INCORPORATED
DOCUMENT NO.	SD-51296-012
SHEET NO.	1 OF 3
SIZE	A3

THIS DRAWING CONTAINS INFORMATION THAT IS PROPRIETARY TO MOLEX INCORPORATED AND SHOULD NOT BE USED WITHOUT WRITTEN PERMISSION

CONFIDENTIAL

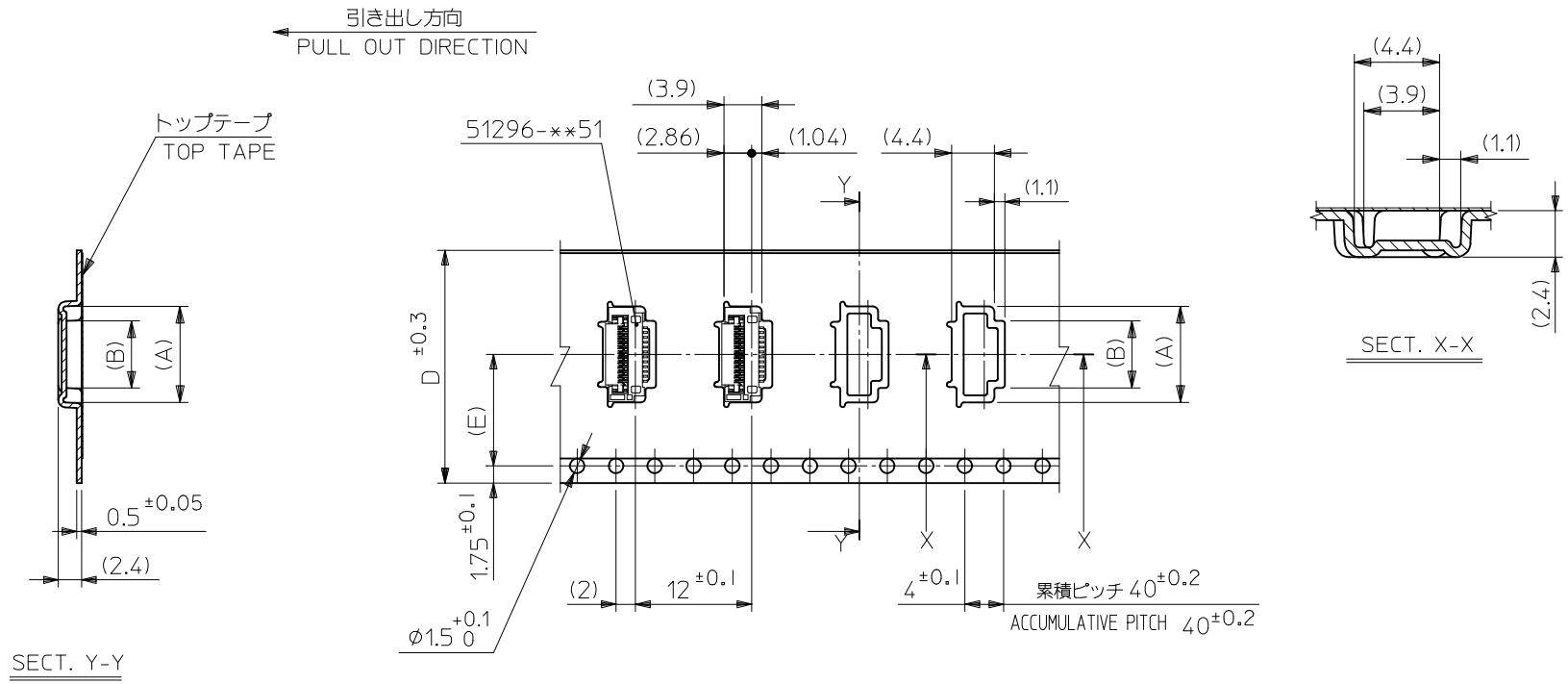

(E)	D	C	(B)	(A)	製品番号 MATERIAL No	極数 Ckt
11.5	24	25.4	9.89	12.9	51296-1894	18
			7.89	10.9	51296-1494	14
			6.89	9.9	51296-1294	12
7.5	16	17.4	4.89	7.9	51296-0894	8

51296-**94 MODEL NO.

REVISED
EC NO: J2009-0892 DESCRIPTION
DRWN:MTAKAHASHI 03 2008/10/14
CH'KD:THARUYAMA 2008/10/14
APPR:NUKITA 2008/10/14
REV

GENERAL TOLERANCES (UNLESS SPECIFIED)

10 UNDER	±0.2
10 OVER 30 UNDER	±0.25
30 OVER	±0.3
ANGULAR	±1 °

DRAFT WHERE APPLICABLE MUST REMAIN WITHIN DIMENSIONS

DIMENSION STYLE: MM ONLY
SCALE: ---
DESIGN UNITS: METRIC
THIRD ANGLE PROJECTION

DRAWN BY: M.UMEDA DATE: 2005/02/23
CHECKED BY: KEN.SUZUKI DATE: 2005/02/23
APPROVED BY: N.UKITA DATE: 2005/02/23

TITLE: 0.5 FPC CONN EASY ON HGT=1.3MM EMBSTP PKG

MOLEX INCORPORATED

MATERIAL NO.: SEE CHART
DOCUMENT NO.: SD-51296-012
SHEET NO.: 2 OF 3
SIZE: A3

THIS DRAWING CONTAINS INFORMATION THAT IS PROPRIETARY TO MOLEX INCORPORATED AND SHOULD NOT BE USED WITHOUT WRITTEN PERMISSION

CONFIDENTIAL

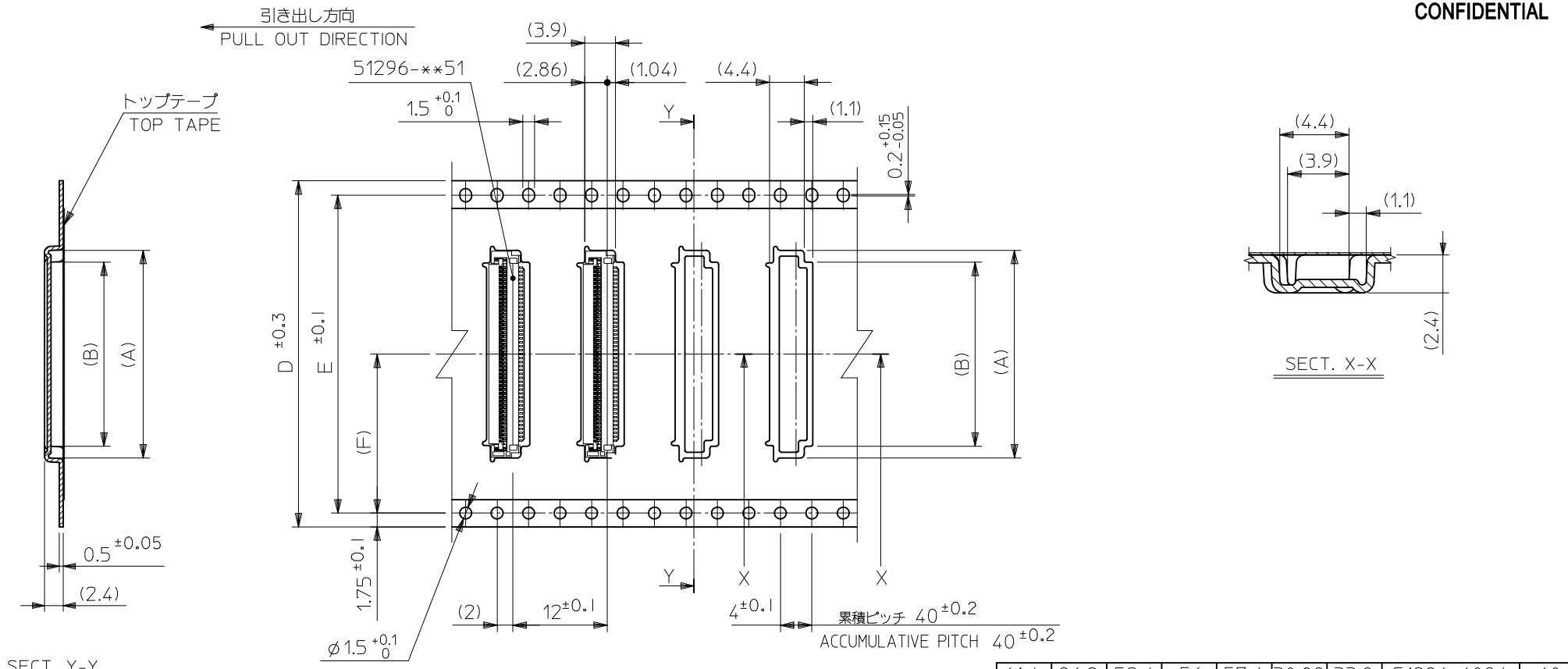

G	(F)	E	D	C	(B)	(A)	製品番号 MATERIAL No	極数 Ckt
61.4	26.2	52.4	56	57.4	30.89	33.9	51296-6094	60
49.4	20.2	40.4	44	45.4	27.89	30.9	51296-5494	54
					25.89	28.9	51296-5094	50
					23.39	26.4	51296-4594	45
					20.89	23.9	51296-4094	40
37.4	14.2	28.4	32	33.4	17.89	20.9	51296-3494	34

51296-**94 MODEL NO.

REVISED
EC NO: J2009-0892
DRWN:MTAKAHASHI 03 2008/10/14
CH'KD:THARUYAMA 2008/10/14
APPR:NUKITA 2008/10/14
DESCRIPTION
REV

GENERAL TOLERANCES (UNLESS SPECIFIED)

10 UNDER	±0.2
10 OVER 30 UNDER	±0.25
30 OVER	±0.3
ANGULAR ±1 °	

DRAFT WHERE APPLICABLE MUST REMAIN WITHIN DIMENSIONS

DIMENSION STYLE: MM ONLY
SCALE: ---
DESIGN UNITS: METRIC
THIRD ANGLE PROJECTION

DRAWN BY: M.UMEDA DATE: 2005/02/23
CHECKED BY: KEN.SUZUKI DATE: 2005/02/23
APPROVED BY: N.UKITA DATE: 2005/02/23

TITLE: 0.5 FPC CONN EASY ON HGT=1.3MM EMBSTP PKG

MOLEX INCORPORATED

MATERIAL NO.: SEE CHART
DOCUMENT NO.: SD-51296-012
SHEET NO.: 3 OF 3
SIZE: A3

THIS DRAWING CONTAINS INFORMATION THAT IS PROPRIETARY TO MOLEX INCORPORATED AND SHOULD NOT BE USED WITHOUT WRITTEN PERMISSION